# CHOHO 农机链系统

征和 链系统技术领导者

*Choho, Chain Transmission Technology Leader*

行业首家A股上市公司

证券代码 003033

# 目录 CONTENTS

Welcome to **CHOHO** Agricultural Machinery Chain






## 青岛征和工业股份有限公司
Qingdao CHOHO Industrial Co., Ltd

**征和 – 链系统技术领导者**

青岛征和工业股份有限公司，创业于 1987 年。创建以来，公司始终保持高速、健康的发展，目前，征和已成为中国链传动行业首家 A 股上市公司、国家认定企业技术中心、国家技术创新示范企业、国家制造业单项冠军示范企业、国家工信部专精特新“小巨人”企业以及中国链传动分会理事长单位。在农业机械链系统、工业自动化链传动系统、发动机链系统、车辆链条等领域，征和已成为行业领军企业。2025 年，征和农机链系统产品为 CLAAS、潍柴雷沃、爱科、约翰迪尔、久保田、巨明、金大丰、英虎、勇猛等上百家知名厂家配套；车辆链系统已为本田、铃木、雅马哈、宝马、大长江、比亚乔、本田技研、吉利、比亚迪和江铃福特等五十多家企业提供产品和技术服务；工业链系统为沈飞、昆船、青岛软控、海尔、中通、大疆、博世等行业知名厂家配套。

目前，征和公司主导产品已达国际先进水平，承担多项国家级重大科研项目，并制修定了 24 项国家或行业标准，获得 300 余项国家发明和新型专利，为行业的技术进步起到了引领和指导作用。

**CHOHO, Chain Transmission Technology Leader**

Qingdao CHOHO Industrial Co., Ltd. was founded in 1987. Since its establishment, the company has maintained high-speed healthy development. At present, CHOHO has become the first A-share listed company in the Chinese chain transmission industry, the national certified enterprise technology center, the national technology innovation demonstration enterprise, the national manufacturing individual champion demonstration enterprise, The Ministry of Industry and Information Technology recognized new, specialized "Little Giant" enterprises and CMCA chain drive branch president enterprise. CHOHO has become the industry leader in agricultural machinery chain systems, industrial automation chain transmission systems, engine chain systems, vehicle chain and other fields. In 2025, CHOHO's agricultural machinery chain system products supported over 100 well-known manufacturers such as CLAAS, LOVOL, AGCO, JOHN DEERE, GIMIG, GOLDDAFENG, YHMAC, YONGMENG and many others. The vehicle chain system has provided products and technical services to more than 50 enterprises, including Honda, Suzuki, Yamaha, BMW, Dachangjiang, Piaggio, Honda Technology Research, Geely, BYD and Jiangling Ford. The industrial chain system supports well-known manufactures such as AVIC, KSEC, MESNAC, Haier, ZTO, DJI, BOSCH and others.

Now, CHOHO's leading product has reached the advanced international level. CHOHO is responsible for several nationally significant research and development projects, has amended 24 national or industrial standard, and obtained more than 300 national invention and new model patents. CHOHO has performed the role of leading and instructing in the technology development of this industry.


2017 年获得行业首批国家技术创新示范企业
2017 The First Batch of National Technology Innovation Demonstration Enterprise


2021 年获得国家制造业单项冠军示范企业
2021 The National Manufacturing Individual Champion Demonstration Enterprise

## 荣誉
Honor

| | |
|---|---|
| 国家认定企业技术中心 | The National Certified Enterprise Technology Center |
| 国家技术创新示范企业 | The National Technology Innovation Demonstration Enterprise |
| 国家高新技术企业 | The National High-tech Enterprise |
| 国家制造业单项冠军示范企业 | The National Manufacturing Individual Champion Demonstration Enterprise |
| 国家工信部专精特新“小巨人”企业 | The Ministry of Industry and Information Technology Recognized New, Specialized "Little Giant" Enterprises |
| 国家级博士后科研工作站 | The National Postdoctoral Research Station |
| 国家及行业标准起草与制修定单位 | National and Industry Standards Drafting and Revision Units |
| 国家绿色工厂 | National Green Factory |
| CMCA 链传动分会理事长单位 | CMCA Chain Drive Branch President Enterprise |
| 首届青岛市市长质量奖 | First-session Qingdao Mayor Quality Award |

1999 年，通过法国 BVQI ISO9002 质量管理体系认证
2003 年，通过挪威 DNV ISO9001 质量体系认证
2007 年，通过 TS16949 质量管理体系认证
2009 年 –2015 年，通过德国 TUV 莱茵 ISO9001:2008 质量体系认证
2009 年 –2018 年，通过德国 TUV 莱茵 TS16949:2009 质量体系认证
2015 年，通过青岛世通 ISO9001:2008 质量体系认证
2018 年，通过青岛世通 ISO9001:2015 质量体系认证
2018 年，通过德国 TUV 莱茵 IATF16949:2016 质量体系认证
2018 年，获得 CNAS 实验室认可证书
2021 年，大型船舶用发动机链条通过曼恩认证
2021 年，通过德国 TUV 莱茵 ISO9001:2015 质量管理体系认证
2022 年，通过 ISO14001:2015 环境管理体系认证
2022 年，通过 ISO45001:2018 职业健康安全管理体系认证
2023 年，通过山东世通产品碳足迹认证






# 行业应用
Industry Application


**小麦机**
Wheat Harvester


**水稻机**
Rice Harvester


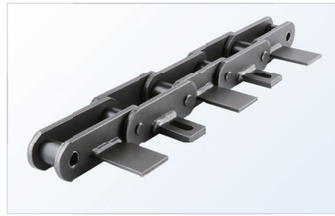

**马铃薯输送机**
Potato Bearing
Conveyer


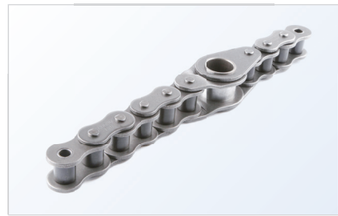

**打捆机**
Baling Machine


**玉米机**
Corn Harvester


**花生收割机**
Peanut Harvester


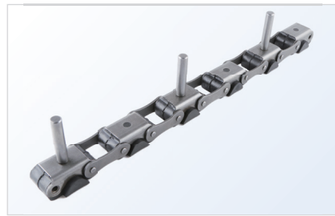

**地膜回收机**
Plastic Film Recycling
Mchinery


**青贮机**
Forage Harvester

# 行业应用
Industry Application

**微耕机**
Rotary Tiller

**打浆机**
Beater

**甘蔗机**
Sugar Cane
Harvester

**伐木机械**
Logging Machinery

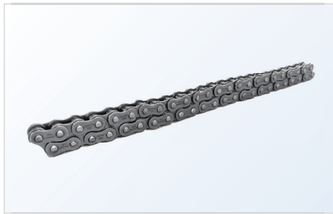

**播种机**
Planter

**采棉机**
Cotton Harvester

**农机链节**
Agricultural
Machinery
Link

**农机链轮**
Agricultural
Machinery
Sprocket

# 高效的生产技术
## Efficient Production Technology

征和从全球引进高端链条生产和检测设备，保证了产品的高品质。同时，从产品的研发到生产，征和也非常关注生产工艺的优化。作为全球化运作的供应商，我们拥有优秀员工、先进技术和生产设备，确保了全球范围内批量生产的经济性、高品质和及时供货。

高效的生产方式是精密产品大批量生产的前提。生产的高效率要归功于征和的专有技术，征和公司在冷成形技术、锻造技术、加工和装配等方面均处于行业的一流地位。高质量和高性价比的产品是我们对客户的承诺和回馈。

Choho imports high-end chain production and testing equipment to ensure the high quality of the products. Meanwhile, from development to production, choho is very concerned about the process optimization. As a global supplier, CHOHO has excellent staff, advanced technology and production equipment to make sure the efficiency, quality and in-time delivery of mass production globally.

Efficient production mode is the precondition of mass production for precision products. High production efficiency comes from unique proprietary technology. CHOHO group is in the leading position of this industry from puching technology, forging, machining and assemlying etc.High quality and cost-effective product is our commitment and feedback to the customers.

**500吨冲床**
500 Ton Punch

**设备作用：**
链板冲压成型
Chain plate stamping

**设备亮点：**
冲压力大，精度高
Large impulse pressure and high precision

## 进口设备 Imported Equipment

**日本精密冲床**
Precision Punching Machine From Japan

**设备精度：**
送料精度 ±0.05mm
真直度：25 μ m
平行度：33um
直角度：9 μ m
保证链板冲裁节距公差≤ 0.005mm
Feeding accuracy ±0.05mm
Straight degree: 25μm
parallelism: 33um
Straight Angle: 9μm
Guarantee blanking pitch tolerance of chain plate ≤0.005mm

**设备速度：** 500 次 / 分钟
Equipment speed:500times/minute

**德国高精度切销机**
High Precision Cutting Machine From Germany

**设备亮点：**
切断与倒角同时完成，无需分步加工
Cutting and chamfering completed at the same time, no need to process step by step.

**设备精度：**
保证销轴切断长度公差≤ 0.04mm
Ensure cut length tolerance of pin≤0.04mm

**设备速度：** 700 次 / 分钟
Equipment speed:700times/minute

**德国高精度卷管机**
High Precision Rolling Machine f rom Germany

**设备亮点：**
套筒卷制同时可以进行油孔制作
Bush rolling can be done at the same time with hole making

**设备精度：**
保证套筒外经公差≤ 0.02mm，接缝≤ 0.02mm
Ensure tolerance of outer diameter ≤ 0.02 mm
seam≤0.02mm

**设备速度：** 400 次 / 分钟
Equipment speed:400times/minute

**履带式抛丸清理机**
Shot Blasting Machine

**设备作用：**
链条各个部件表面抛丸处理
Shot blasting treatment on the surface of all parts of the chain

**设备亮点：**
噪音小，尘埃少，生产效率高
Low noise, less dust and high efficiency

## 材料及性能检测设备 Material and Performance Testing Equipment

**三坐标测量仪**
Coordinate Measuring Machine

**设备作用：**
精密测量链条及其系统件的外形轮廓尺寸
Accurately measure contour size of chain and system parts

**德国光谱分析仪**
Germany Optical Spectrum Analyzer

**设备作用：**
检测原材料的化学成分
Test the chemical composition of raw materials

**日本金相显微镜**
Japanese Metallographic Microscope

**设备作用：**
检测分析链条及其系统件的金相组织
Detect and analyze the metallographic structure of chain and system parts

## 先进设备 Advanced Equipment

**自动上料平台**
Automatic Feeding Platform

**设备作用：**
帮助高速装配机上料，机械组装链条
The automatic feeding platform helps the high-speed assembly machine to load and mechanically assemble the chain

**密封圈链条组装平台**
Sealing Ring Chain Assembly Platform

**设备作用：**
组装密封圈链条
Assemble sealing ring chain

## 出厂检测设备 Factory Testing Equipment

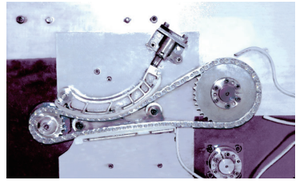

**综合性能试验台**
Comprehensive Performance Test Platform

**设备作用：**
检测链条耐磨性能
Test chain wear resistance

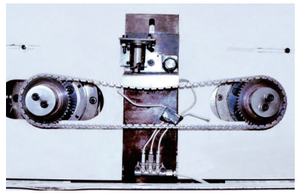

**回转疲劳试验机**
Rotary Fatigue Testing Machine

**设备作用：**
检测链条回转疲劳性能
Detect the chain rotary fatigue performance

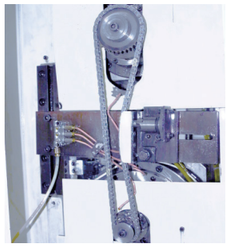

**封闭式链条耐磨试验机**
Enclosed Chain Wear Testing Machine

**设备作用：**
检测链条耐磨性能
Test chain wear resistance

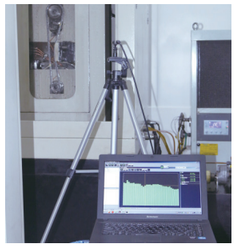

**噪声试验台**
Noise Test Rig

**设备作用：**
检测链系统噪声情况
Test chain system noise situation

# 链条特点
Chain Advantages

## 1 O/X密封圈
O/X-ring


▲ O型圈封住润滑油出口的方式
The lubricant oil outlet is sealed by O-ring.

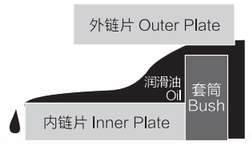


▲ 普通链条的润滑油容易溢出
The oil or the grease of the common chain is easily overflowed.


▲ X型圈封住润滑油出口的方式
The lubricant oil outlet is sealed by X-ring.


## 2 α处理销轴
α-PIN

## 3 含油套筒
Sintered Bushing

▲ 耐磨 Anti-wearing ▲ 耐高温 Anti-high tempreture ▲ 耐腐蚀 Anti-corrosion

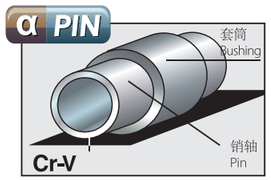


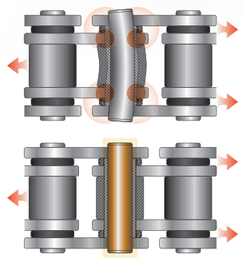

▲ 链条运行过程中，通过套筒与销轴，套筒与滚子的摩擦，在摩擦副之间形成油膜，起到自动润滑的作用。
In the running process of the chain, oil film is formed through the friction between bush and pin, bush and roller, which plays the role of automatic lubrication.

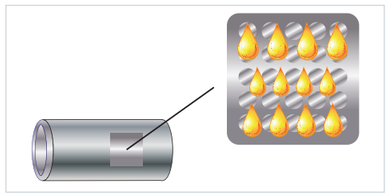

## 4 强力预拉
Strong Pre-tensioning

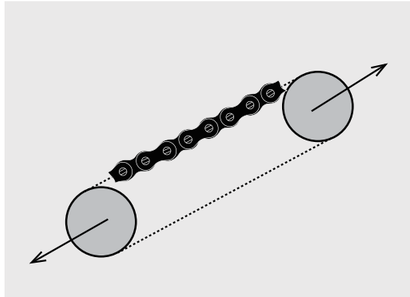

强力预拉是对装配好的整条链条施加约 2/3Q(Q 为链条的极限拉伸载荷 ) 预拉载荷，使链板孔边缘产生残余压应力。当链条工作受到拉力作用后，残余压应力抵消掉部分拉应力，使得链板的最大应力下降，从而提高链板的疲劳强度。

The chain is strongly pre-tensioned before sell. It can reduce the initial elongation and improve anti-fatigue strength.

## 5 抛丸处理
Shot Blasting

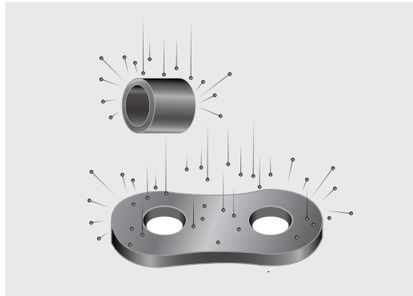

一是可在链板表面形成压应力，显著提高链条的疲劳寿命，二是能降低链板表面的有效应力集中系数，防止链板孔及两侧表面产生淬火后的微裂纹。

Can significantly improve the apparent fatigue life and prevent the microcracks in the chain plates.

## 6 自动上油
Automatic Oiling


征和自主研发的自动上油机，链条浸油前充分预热，链条入油后油品流动性好，链条上油均匀充分，润滑良好，提高了链条耐磨性能，保证了大批量生产的上油效率。

Automatic lubricating machine can make the chain lubricate evenly and fully, improve the wear resistance of the chain.

## 7 四角铆头
Four sides riveting

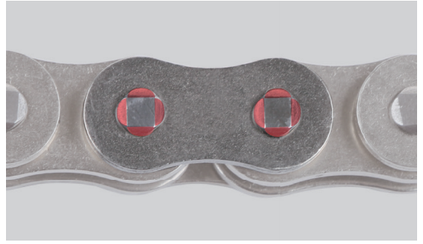

提高销轴和链板间的牢固度。通常在链条受到较大拉力的时候，销轴可能会从链板中脱出，四角铆头可显著降低这种失效机率。

Improve the firmness of the pin and chain plate, significantly reduce the probability of the pin coming off chain plates.

## 8 无缝套筒
Solid Bush



无缝套筒，采用冷挤压技术使用成型，圆筒无缝隙，真圆度大大提高，不易变形。无缝套筒与销轴的配合是以面接触而不是以点接触，增加产品耐磨性能。

Seamless bush, using cold extrusion technology to shape, seamless cylinder, roundness greatly improved, not easy to deformation.The fitting of seamless bush and pin is made by surface contact instead of point contact to increase the wear resistance of the product.

# GS38 母链 GS38 Parent Chain

CHOHO



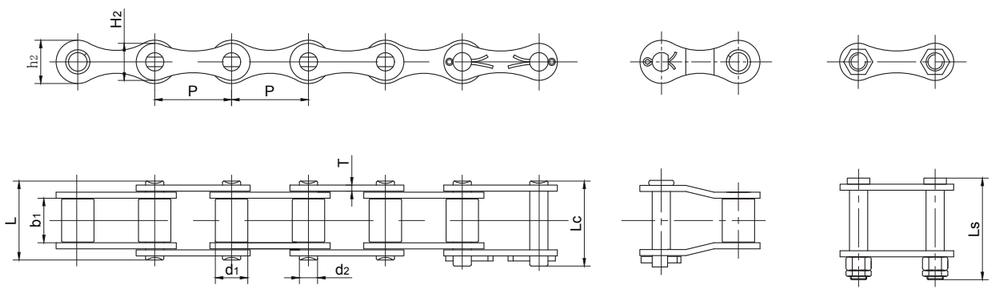


| 征和链号 CHOHO Chain No. | 节距 | 滚子直径 | 内节内宽 | 销轴直径 | 销轴长度 | | | 内链板高度 | 内链板高度 | 链板厚度 | 抗拉强度 | 平均抗拉强度 | 每米长重 |
|---|---|---|---|---|---|---|---|---|---|---|---|---|---|
| | P | d1 max | b1 min | d2 max | L max | Lc max | Ls max | h2 max | H2 max | T max | Q min | $Q_0$ | q |
| | mm | mm | mm | mm | mm | mm | mm | mm | mm | mm | kN | kN | kg/m |
| GS38 | 38.0 | 16.00 | 22.0 | 9.0 | 39.0 | 43.0 | 50.3 | 21.4 | 18.4 | 3.0 | 45.0 | 60.0 | 2.00 |
| GS38V1 | 38.0 | 16.00 | 22.0 | 9.0 | 39.0 | 43.0 | 50.3 | 21.4 | 18.4 | 3.0 | 45.0 | 60.0 | 2.00 |



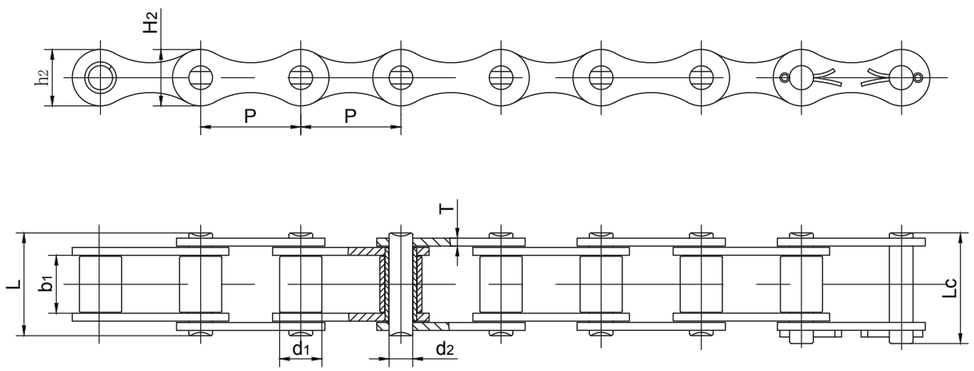


| 征和链号 CHOHO Chain No. | 节距 | 滚子直径 | 内节内宽 | 销轴直径 | 销轴长度 | 内链板高度 | 外链板高度 | 链板厚度 | 抗拉强度 | 平均抗拉强度 | 每米长重 |
|---|---|---|---|---|---|---|---|---|---|---|---|
| | P | d1 max | b1 min | d2 max | L max | h2 max | H2 max | T max | Q min | $Q_0$ | q |
| | mm | mm | mm | mm | mm | mm | mm | mm | kN | kN | kg/m |
| GS38T | 38.0 | 16.00 | 22.0 | 9.0 | 39.0 | 21.4 | 21.4 | 3.0 | 45.0 | 60.0 | 2.04 |

# GS38 母链 GS38 Parent Chain

CHOHO



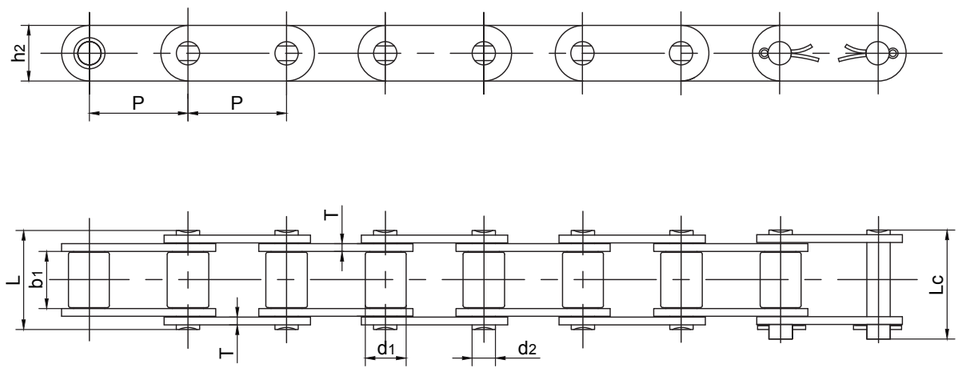


| 征和链号 CHOHO Chain No. | 节距 | 滚子直径 | 内节内宽 | 销轴直径 | 销轴长度 | | 内链板高度 | 链板厚度 | 抗拉强度 | 平均抗拉强度 | 每米长重 |
|---|---|---|---|---|---|---|---|---|---|---|---|
| | P | d1 max | b1 min | d2 max | L max | Lc max | h2 max | T max | Q min | $Q_0$ | q |
| | mm | mm | mm | mm | mm | mm | mm | mm | kN | kN | kg/m |
| CGS38 | 38.0 | 15.88 | 22.0 | 9.00 | 39.0 | 43.0 | 21.5 | 3.0 | 56.0 | 60.0 | 2.39 |

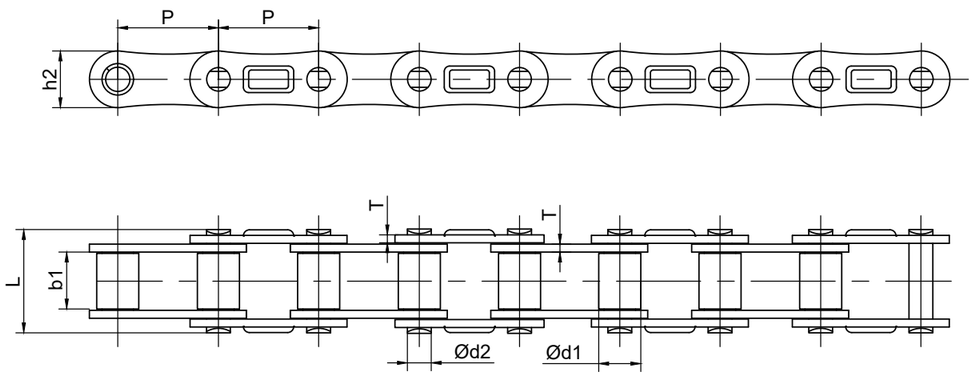


| 征和链号 CHOHO Chain No. | 节距 | 滚子直径 | 内节内宽 | 销轴直径 | 销轴长度 | | 内链板高度 | 链板厚度 | 抗拉强度 | 平均抗拉强度 | 每米长重 |
|---|---|---|---|---|---|---|---|---|---|---|---|
| | P | d1 max | b1 min | d2 max | L max | Lc max | $h_2$ max | T max | Q min | $Q_0$ | q |
| | mm | mm | mm | mm | mm | mm | mm | mm | kN | kN | kg/m |
| GS38K | 38.0 | 16.00 | 22.0 | 9.00 | 39.0 | / | 21.5 | 3.0 | 45.0 | 60.0 | 2.29 |

# GS38 过桥链 GS38 Bridging Chain

CHOHO



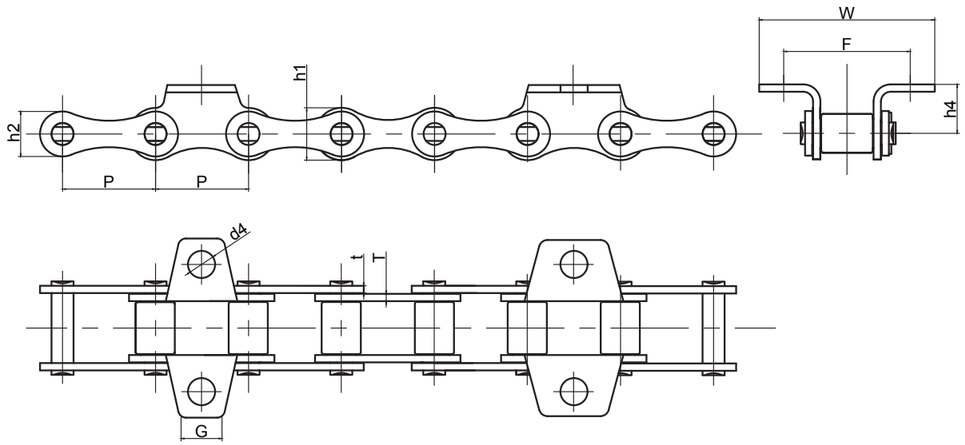


| 征和链号 CHOHO Chain No. | P | t | T | G | F | W | H1 | H2 | h4 | d4 |
|---|---|---|---|---|---|---|---|---|---|---|
| | mm | mm | mm | mm | mm | mm | mm | mm | mm | mm |
| GS38P2 | 38.0 | 3.0 | 3.0 | 16.0 | 52.0 | 72.0 | 21.4 | 18.4 | 20.0 | 11.0 |
| GS38P2S | 38.0 | 3.0 | 3.0 | 16.0 | 52.0 | 72.0 | 21.4 | 18.4 | 20.0 | 8.5 |
| GS38P2W | 38.0 | 3.0 | 3.0 | 27.0 | 52.0 | 72.0 | 21.4 | 18.4 | 20.0 | 11.1 |
| GS38P2SW | 38.0 | 3.0 | 3.0 | 27.0 | 52.0 | 72.0 | 21.4 | 18.4 | 20.0 | 8.5 |
| GS38TP2W | 38.0 | 3.0 | 3.0 | 27.0 | 52.0 | 72.0 | 21.4 | 21.4 | 20.0 | 11.1 |
| GS38TP2SW | 38.0 | 3.0 | 3.0 | 27.0 | 52.0 | 72.0 | 21.4 | 21.4 | 20.0 | 8.5 |



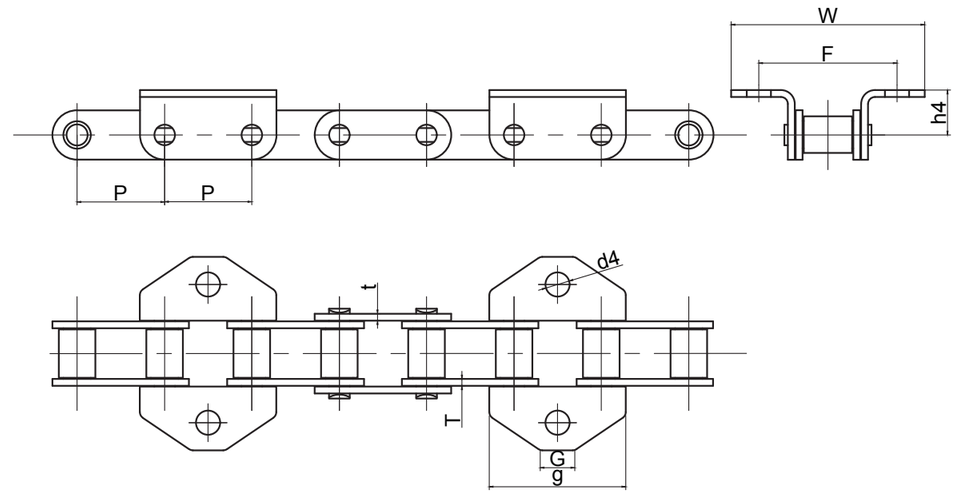


| 征和链号 CHOHO Chain No. | P | t | T | G | g | F | W | h4 | d4 |
|---|---|---|---|---|---|---|---|---|---|
| | mm | mm | mm | mm | mm | mm | mm | mm | mm |
| CGS38P2 | 38.0 | 3.00 | 3.0 | 15.0 | 59.0 | 60.0 | 84.0 | 19.5 | 10.5 |
| CGS38HF39K1 | 38.0 | 3.50 | 3.5 | 34.8 | 59.0 | 60.0 | 85.0 | 19.0 | 10.3 |

# GS38 过桥链 GS38 Bridging Chain

CHOHO



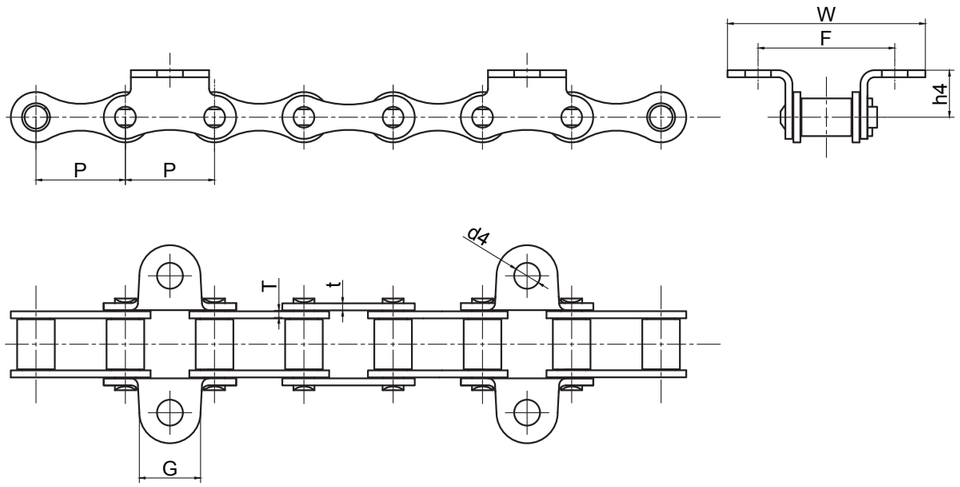


| 征和链号 CHOHO Chain No. | P | t | T | G | F | W | h4 | d4 |
|---|---|---|---|---|---|---|---|---|
| | mm | mm | mm | mm | mm | mm | mm | mm |
| GS38K1 | 38.0 | 3.0 | 3.0 | 26.0 | 58.0 | 84.4 | 20.0 | 11.0 |

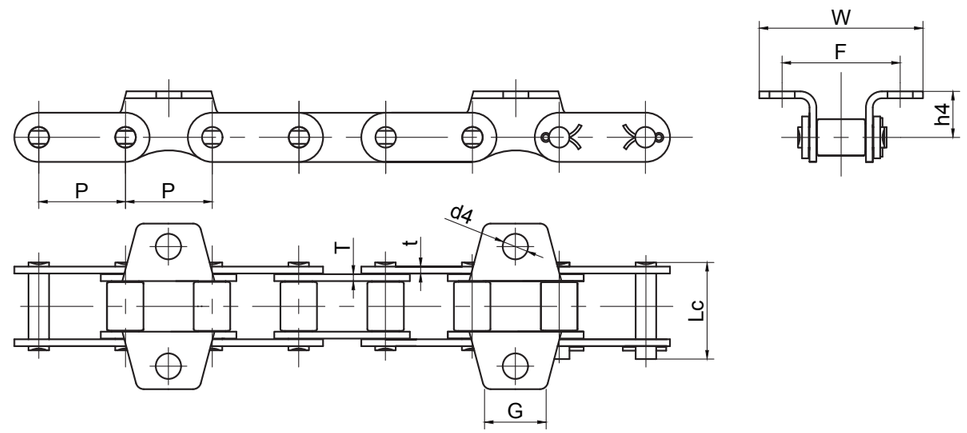


| 征和链号 CHOHO Chain No. | P | t | T | G | F | W | h4 | d4 |
|---|---|---|---|---|---|---|---|---|
| | mm | mm | mm | mm | mm | mm | mm | mm |
| CGS38P2W | 38.0 | 3.00 | 3.0 | 27.0 | 52.0 | 72.0 | 20.0 | 11.1 |
| CGS38P2K1 | 38.0 | 3.00 | 3.0 | 27.0 | 52.0 | 72.0 | 17.0 | 10.5 |
| CGS38P2K1V1 | 38.0 | 3.00 | 3.0 | 26.0 | 52.0 | 72.0 | 17.0 | 8.5 |

# GS38 过桥链 GS38 Bridging Chain



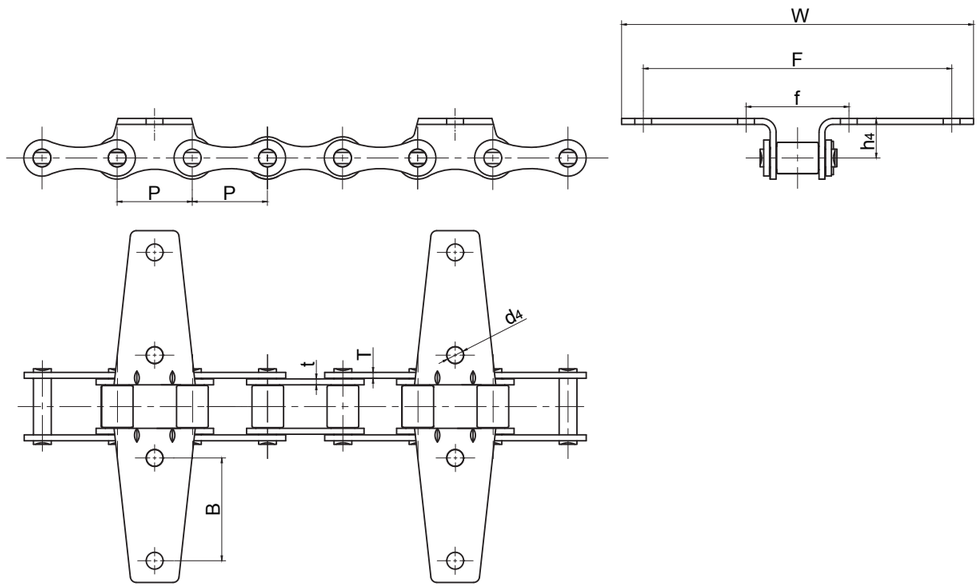


| 征和链号 CHOHO Chain No. | P | T | t | B | f | F | W | d4 | h4 |
|---|---|---|---|---|---|---|---|---|---|
| | mm | mm | mm | mm | mm | mm | mm | mm | mm |
| GS38F20.04 | 38.0 | 3.00 | 3.0 | 52.0 | 52.0 | 156.0 | 178.0 | 8.5 | 20.0 |





# GS38 拨禾链 GS38 Potting Chain



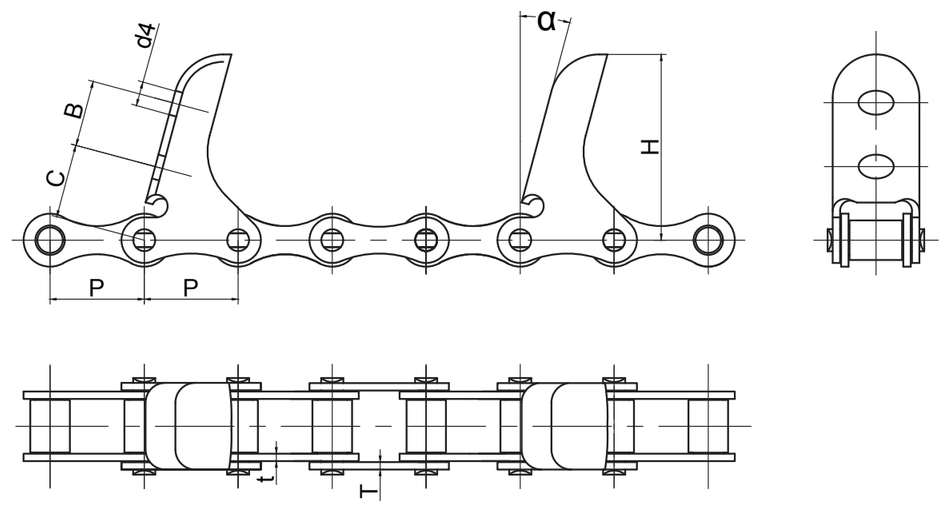


| 征和链号 CHOHO Chain No. | P | t | T | C | B | α | H | d4 |
|---|---|---|---|---|---|---|---|---|
| | mm | mm | mm | mm | mm | / | mm | mm |
| GS38C6E | 38.0 | 3.00 | 3.0 | / | / | 15° | 62.0 | / |
| GS38C6E(5°) | 38.0 | 3.00 | 3.0 | / | / | 5° | 62.0 | / |
| GS38C6EJK | 38.0 | 3.00 | 3.0 | 21.4 | 21.0 | 15° | 62.0 | 6.5 |
| GS38C6EF12JK | 38.0 | 3.00 | 3.0 | 11.0 | 19.5 | 12.0 | 66.0 | 7.0 |

# GS38 拨禾链 GS38 Potting Chain





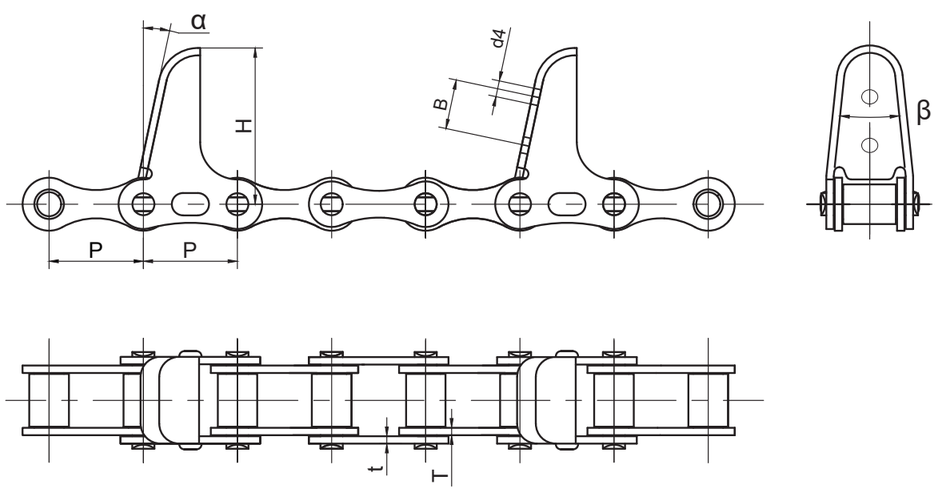


| 征和链号 CHOHO Chain No. | P | t | T | α | β | H | B | d4 |
|---|---|---|---|---|---|---|---|---|
| | mm | mm | mm | / | / | mm | mm | mm |
| GS38C6EF1 | 38.0 | 3.00 | 3.0 | 12° | 12° | 64.0 | / | / |
| GS38C6EF1A | 38.0 | 3.00 | 3.0 | 12° | 12° | 64.0 | / | / |
| GS38C6EF1AJK | 38.0 | 3.00 | 3.0 | 12° | 12° | 64.0 | 20.0 | 6.5 |



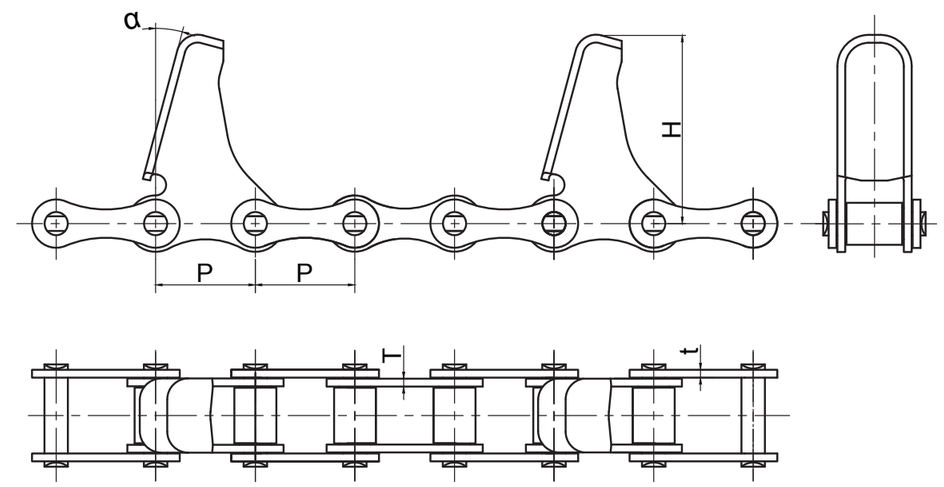


| 征和链号 CHOHO Chain No. | P | t | T | α | H |
|---|---|---|---|---|---|
| | mm | mm | mm | / | mm |
| GS38C6EF2 | 38.0 | 3.00 | 3.0 | 11° | 62.0 |
| GS38C6EF2(72) | 38.0 | 3.00 | 3.0 | 15° | 72.0 |

# GS38 拨禾链 GS38 Potting Chain





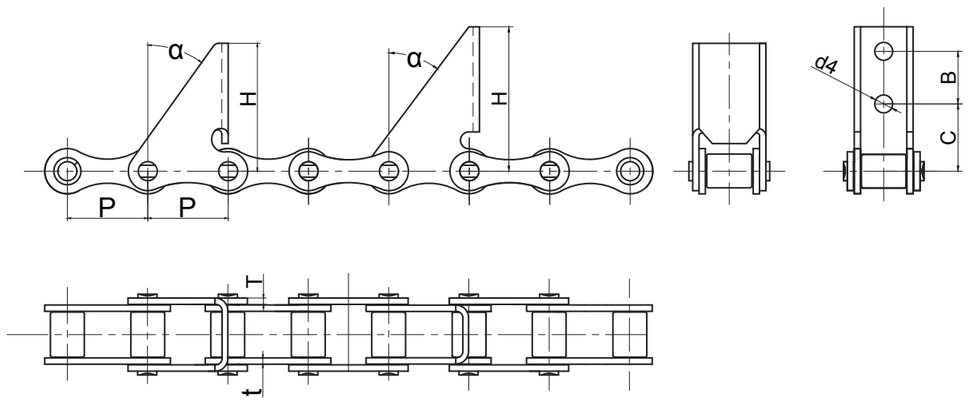


| 征和链号 CHOHO Chain No. | P | t | T | B | C | H | d4 | α |
|---|---|---|---|---|---|---|---|---|
| | mm | mm | mm | mm | mm | mm | mm | / |
| GS38C6EF3 | 38.0 | 3.00 | 3.0 | / | / | 60.5 | / | 35° |
| GS38C6EF5 | 38.0 | 3.00 | 3.0 | 32.0 | 25.0 | 68.0 | 8.5 | 37° |

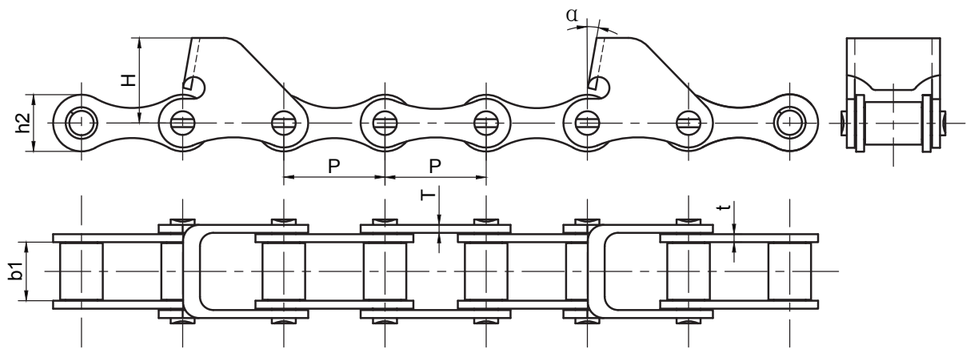


| 征和链号 CHOHO Chain No. | P | b1 | h2 | α | H |
|---|---|---|---|---|---|
| | mm | mm | mm | / | mm |
| GS38C6EF6 | 38.0 | 22.00 | 21.4 | 10° | 32.0 |

# GS38 拨禾链 GS38 Potting Chain

CHOHO



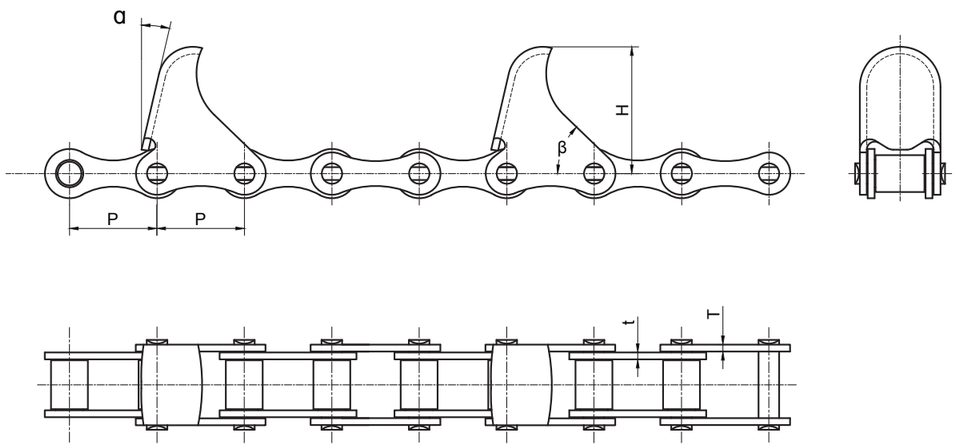


| 征和链号 CHOHO Chain No. | P | t | T | α | β | H |
|---|---|---|---|---|---|---|
| | mm | mm | mm | / | / | mm |
| GS38C6EF7 | 38.0 | 3.00 | 3.0 | 13° | 44° | 55.0 |

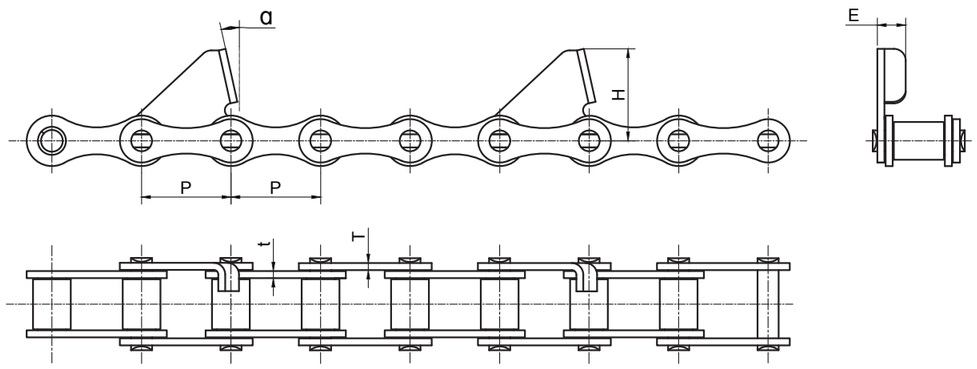


| 征和链号 CHOHO Chain No. | P | t | T | α | E | H |
|---|---|---|---|---|---|---|
| | mm | mm | mm | / | mm | mm |
| GS38C6EF8 | 38.0 | 3.00 | 3.0 | 12.5° | 12.0 | 39.0 |

# GS38 拨禾链 GS38 Potting Chain

CHOHO



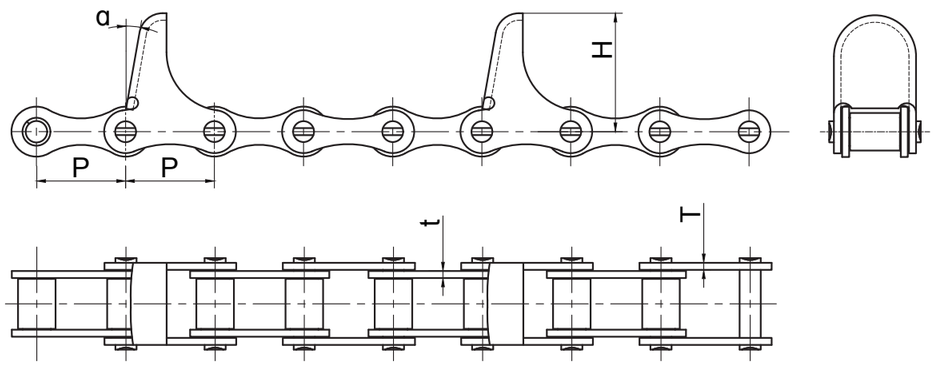


| 征和链号 CHOHO Chain No. | P | t | T | α | H |
|---|---|---|---|---|---|
| | mm | mm | mm | / | mm |
| GS38C6EF9 | 38.0 | 3.00 | 3.0 | 10° | 50.5 |

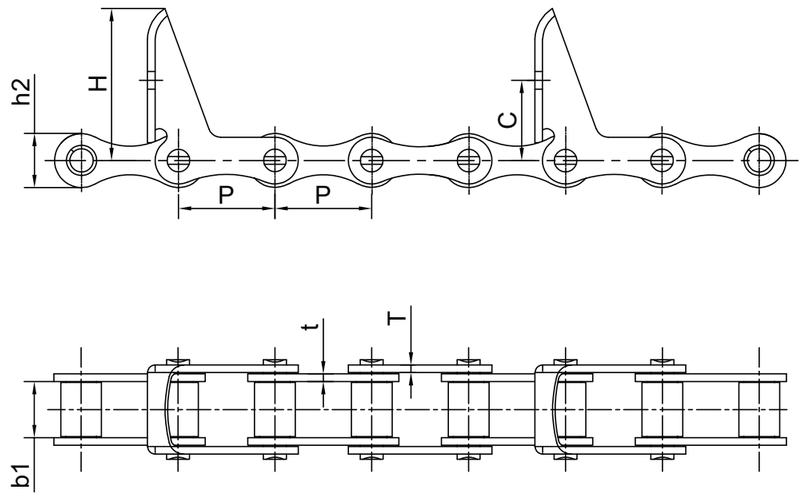


| 征和链号 CHOHO Chain No. | P | b1 | h2 | t | T | α | H | C |
|---|---|---|---|---|---|---|---|---|
| | mm | mm | mm | mm | mm | / | mm | mm |
| GS38C6EF11JK | 38.0 | 22.00 | 21.4 | 3.00 | 3.0 | 0.0 | 59.7 | 31.5 |

# GS38 拨禾链 GS38 Potting Chain





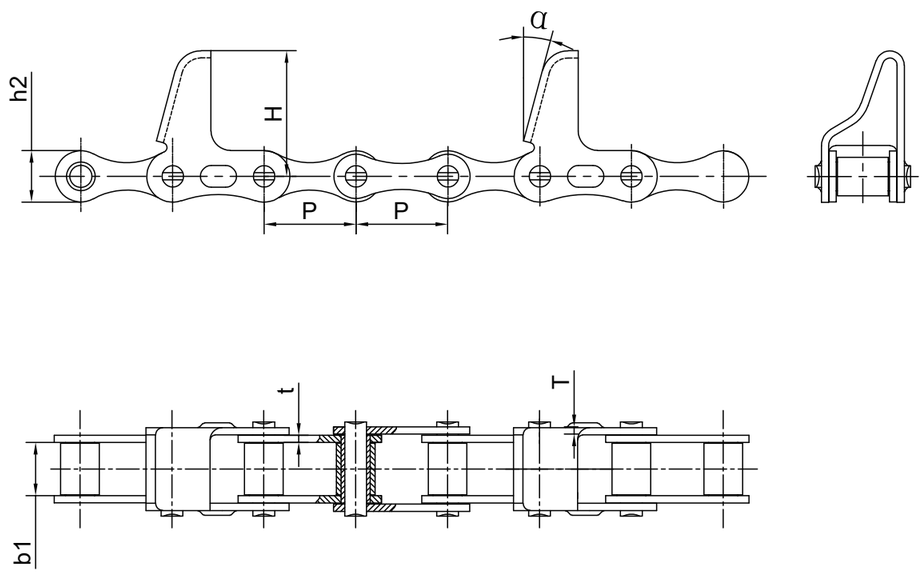


| 征和链号 CHOHO Chain No. | P | b1 | h2 | t | T | α | H |
|---|---|---|---|---|---|---|---|
| | mm | mm | mm | mm | mm | / | mm |
| GS38CPEF3 | 38.0 | 22.00 | 21.4 | 3.00 | 3.0 | 15° | 52.0 |

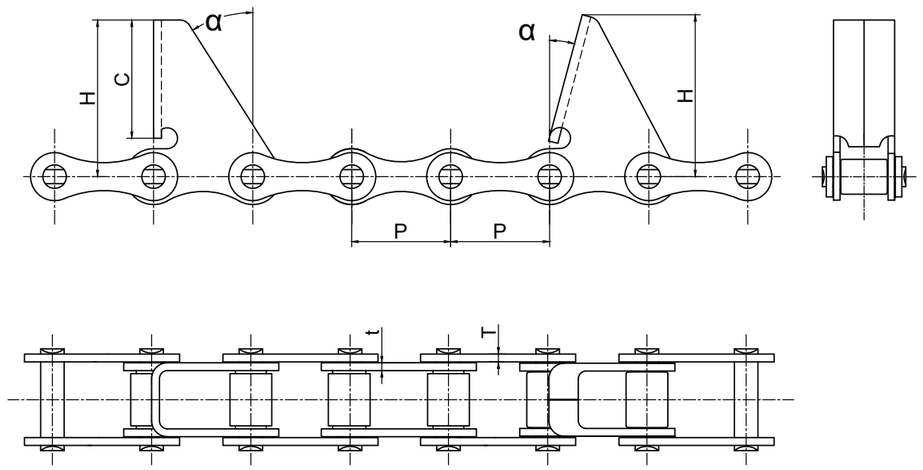


| 征和链号 CHOHO Chain No. | P | t | T | α | C | H |
|---|---|---|---|---|---|---|
| | mm | mm | mm | / | mm | mm |
| GS38F1 | 38.0 | 3.00 | 3.0 | 32.5° | 45.3 | 60.0 |
| GS38F5 | 38.0 | 3.00 | 3.0 | 15° | / | 62.0 |

# GS38 喂入链、提升链 GS38 Feeding Chain, Lifting Chain

CHOHO



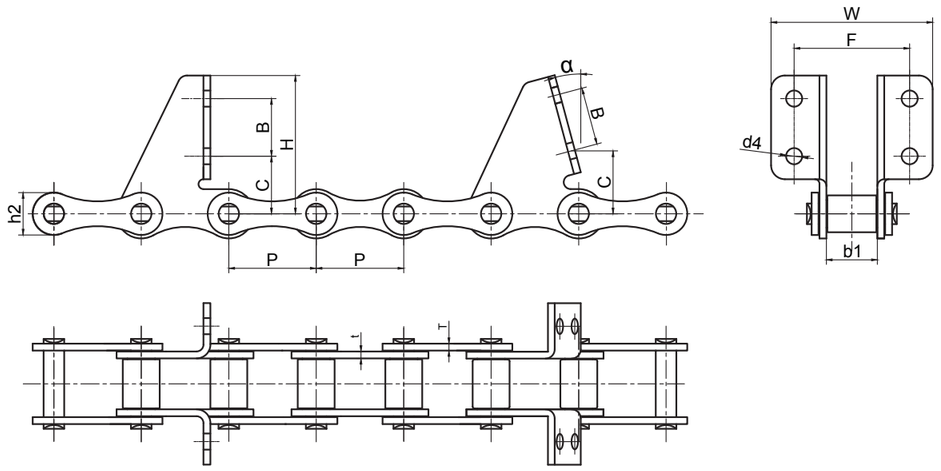


| 征和链号 CHOHO Chain No. | P | b1 | C | B | F | W | d4 | H | h2 | α |
|---|---|---|---|---|---|---|---|---|---|---|
| | mm | mm | mm | mm | mm | mm | mm | mm | mm | / |
| GS38F3 | 38.0 | 22.00 | 25.0 | 25.0 | 50.0 | 70.0 | 7 | 60.0 | 21.4 | / |
| GS38F3(φ8.5) | 38.0 | 22.00 | 25.0 | 25.0 | 50.0 | 70.0 | 8.5 | 60.0 | 21.4 | / |
| GS38F8 | 38.0 | 22.00 | 27.2 | 25.0 | 50.0 | 70.0 | 7 | 60.0 | 21.4 | 15° |

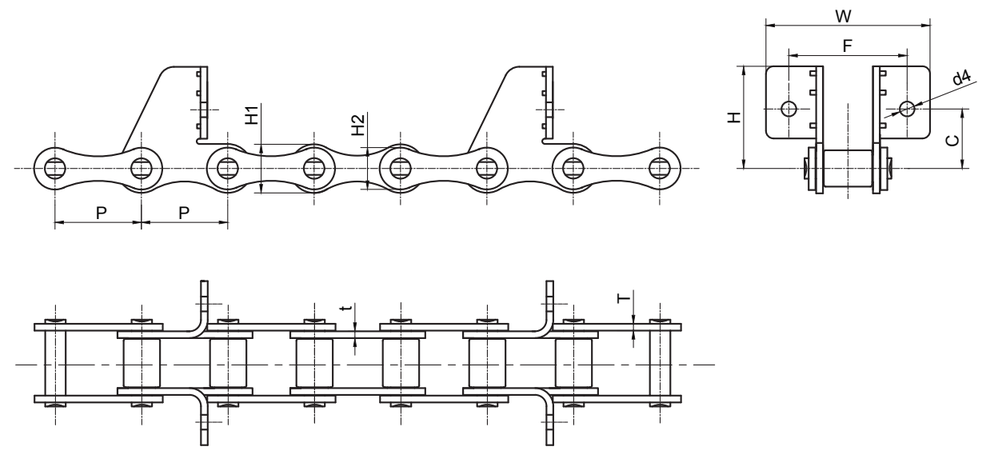


| 征和链号 CHOHO Chain No. | P | T | t | C | W | F | H1 | H2 | H | d4 |
|---|---|---|---|---|---|---|---|---|---|---|
| | mm | mm | mm | mm | mm | mm | mm | mm | mm | mm |
| GS38F6 | 38.0 | 3.0 | 3.0 | 30.0 | 70.0 | 52.0 | 21.4 | 18.4 | 55.0 | 8.5 |
| GS38TF6 | 38.0 | 3.0 | 3.0 | 30.0 | 70.0 | 52.0 | 21.4 | 21.4 | 55.0 | 8.5 |

# GS38 喂入链、提升链 GS38 Feeding Chain, Lifting Chain

CHOHO



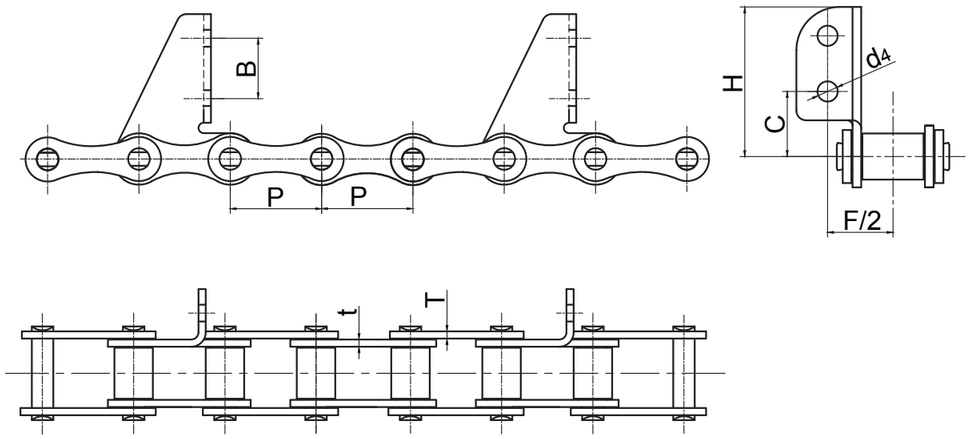


| 征和链号 CHOHO Chain No. | P | T | t | B | f | F | H | d4 |
|---|---|---|---|---|---|---|---|---|
| | mm | mm | mm | mm | mm | mm | mm | mm |
| GS38F4 | 38.0 | 3.00 | 3.0 | 25.0 | 32.0 | 26.0 | 67 | 7.0 |
| GS38F12 | 38.0 | 3.00 | 3.0 | 21.0 | 25.0 | 25.0 | 56 | 8.5 |

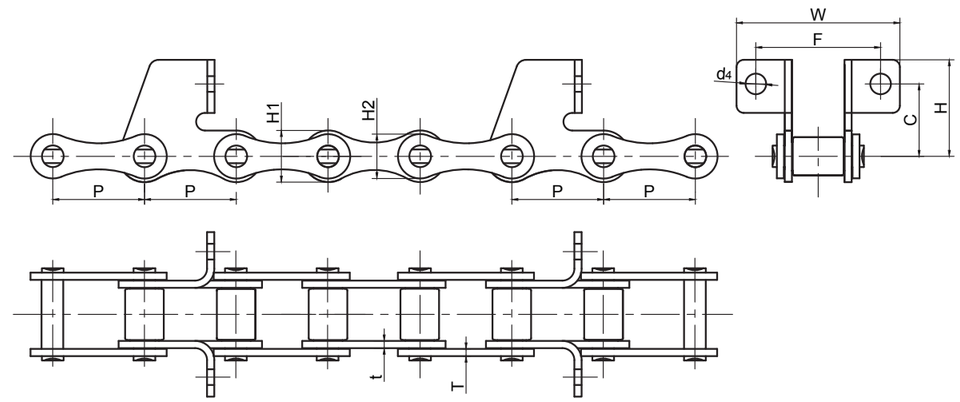


| 征和链号 CHOHO Chain No. | P | T | t | C | W | F | H1 | H2 | H | d4 |
|---|---|---|---|---|---|---|---|---|---|---|
| | mm | mm | mm | mm | mm | mm | mm | mm | mm | mm |
| GS38F7 | 38.0 | 3.0 | 3.0 | 30.0 | 68.0 | 52.0 | 21.4 | 18.4 | 40.0 | 8.5 |
| GS38F7V1 | 38.0 | 3.0 | 3.0 | 30.0 | 68.0 | 52.0 | 21.4 | 18.4 | 40.0 | 8.5 |
| GS38F7(6.5) | 38.0 | 3.0 | 3.0 | 30.0 | 68.0 | 52.0 | 21.4 | 18.4 | 40.0 | 6.5 |
| GS38TF7 | 38.0 | 3.0 | 3.0 | 30.0 | 68.0 | 52.0 | 21.4 | 21.4 | 40.0 | 8.5 |
| GS38TF7(6.5) | 38.0 | 3.0 | 3.0 | 30.0 | 68.0 | 52.0 | 21.4 | 21.4 | 40.0 | 6.5 |

# GS38 喂入链、提升链 GS38 Feeding Chain, Lifting Chain

CHOHO



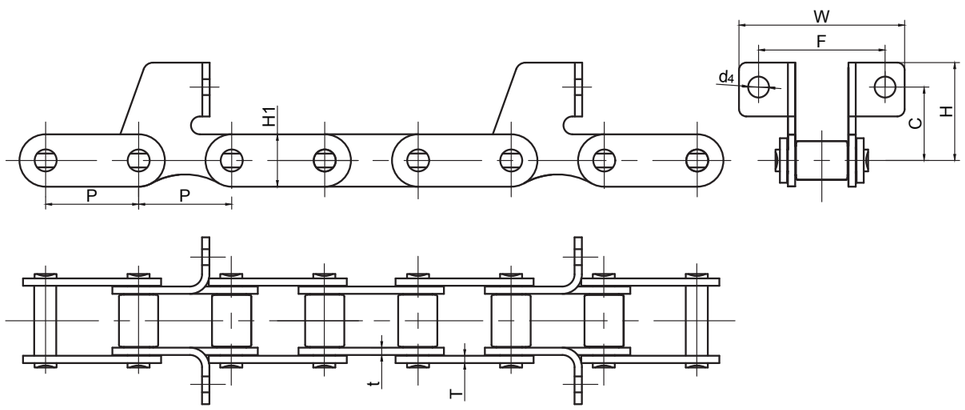


| 征和链号 CHOHO Chain No. | P | T | t | C | W | F | H1 | H | d4 |
|---|---|---|---|---|---|---|---|---|---|
| | mm | mm | mm | mm | mm | mm | mm | mm | mm |
| CGS38F7 | 38.0 | 3.0 | 3.0 | 30.0 | 68.0 | 52.0 | 21.4 | 40.0 | 8.5 |

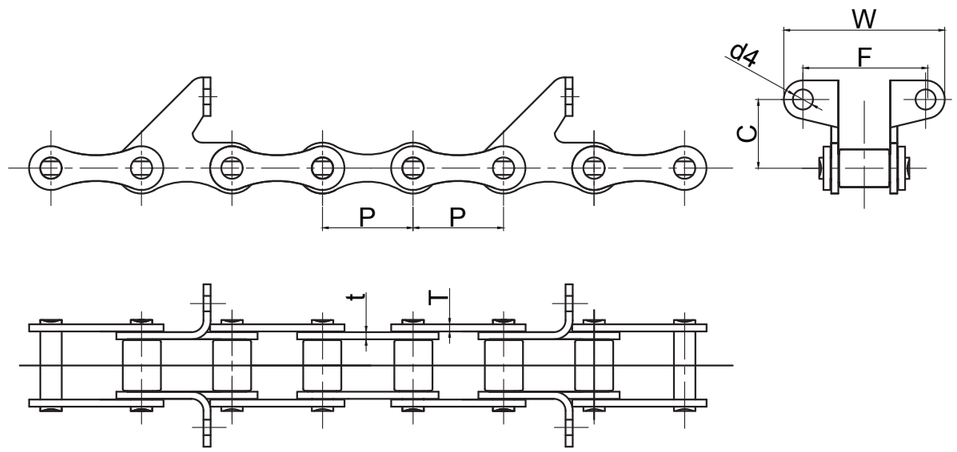


| 征和链号 CHOHO Chain No. | P | T | t | C | W | F | d4 |
|---|---|---|---|---|---|---|---|
| | mm | mm | mm | mm | mm | mm | mm |
| GS38LD2 | 38.0 | 3.0 | 3.0 | 30.0 | 68.2 | 52.0 | 6.5 |
| GS38LD2A | 38.0 | 3.0 | 3.0 | 30.0 | 68.2 | 52.0 | 8.5 |

# GS38 喂入链、提升链 GS38 Feeding Chain, Lifting Chain





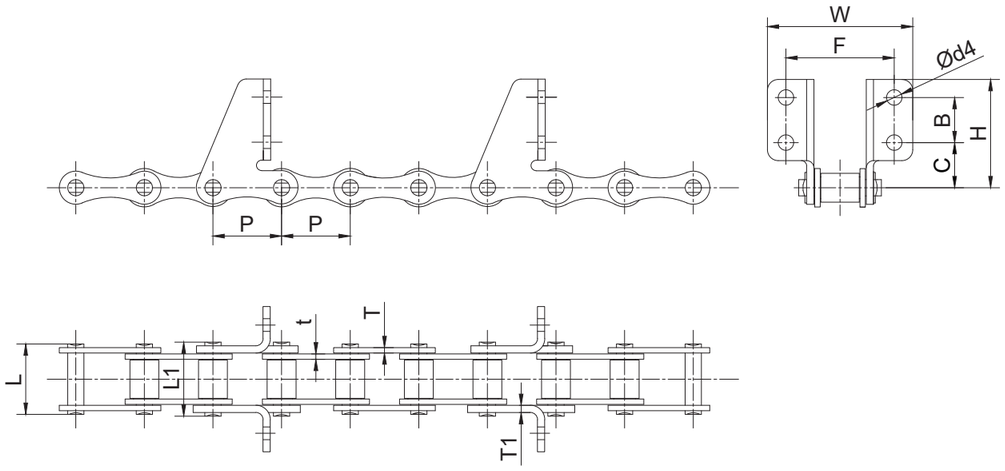


| 征和链号 CHOHO Chain No. | P | T | t | T1 | B | L | L1 | F | W | H | d4 | C |
|---|---|---|---|---|---|---|---|---|---|---|---|---|
| | mm | mm | mm | mm | mm | mm | mm | mm | mm | mm | mm | mm |
| GS38F3HK1 | 38.0 | 3.00 | 3.0 | 4 | 25.0 | 39.0 | 41 | 60.0 | 80.5 | 60 | 8.5 | 25.00 |

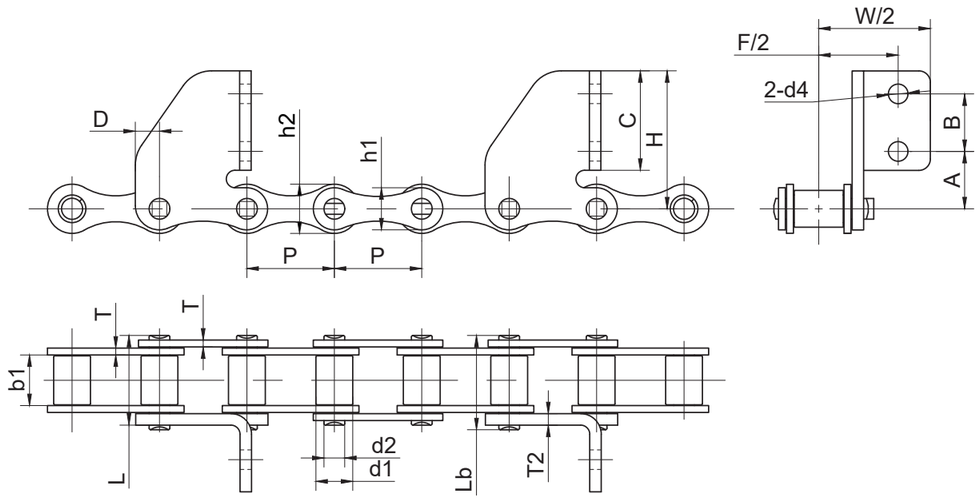


| 征和链号 CHOHO Chain No. | P | T | T2 | b1 | L | Lb | d1 | d2 | D | h2 | h1 | C | H | d4 | A | B | W/2 | F/2 |
|---|---|---|---|---|---|---|---|---|---|---|---|---|---|---|---|---|---|---|
| | mm | mm | mm | mm | mm | mm | mm | mm | mm | mm | mm | mm | mm | mm | mm | mm | mm | mm |
| GS38F3HV2 | 38.0 | 3.00 | 5.0 | 22.0 | 39.0 | 41.0 | 16 | 9.0 | 10.5 | 21.4 | 18.3 | 43.3 | 60.0 | 8.5 | 25.0 | 25.0 | 48.5 | 34.5 |

# GS38 喂入链、提升链 GS38 Feeding Chain, Lifting Chain

CHOHO



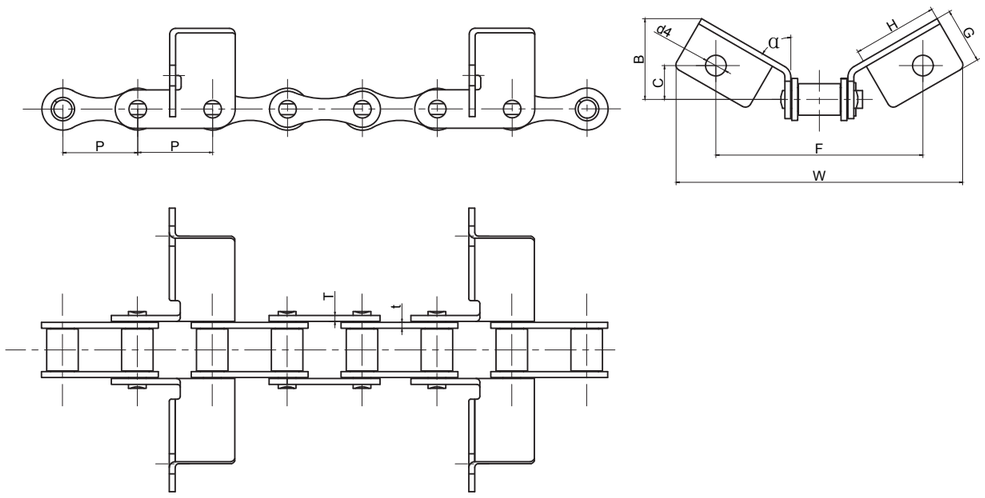


| 征和链号 CHOHO Chain No. | P | T | t | α | G | B | C | W | F | H | d4 |
|---|---|---|---|---|---|---|---|---|---|---|---|
| | mm | mm | mm | / | mm | mm | mm | mm | mm | mm | mm |
| GS38F9 | 38.0 | 3 | 3.0 | 60° | 28.3 | 41 | 17.2 | 145.6 | 105.0 | 43.2 | 10.5 |



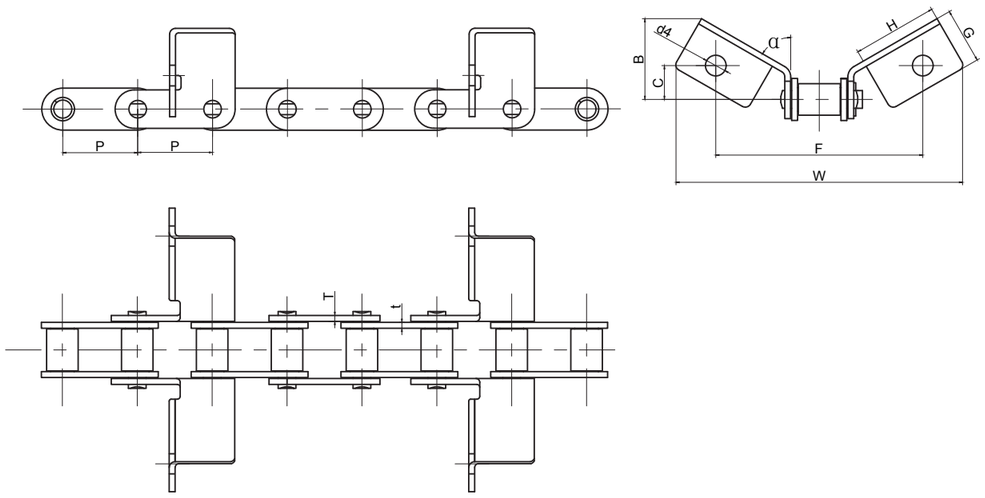


| 征和链号 CHOHO Chain No. | P | T | t | α | G | B | C | W | F | H | d4 |
|---|---|---|---|---|---|---|---|---|---|---|---|
| | mm | mm | mm | / | mm | mm | mm | mm | mm | mm | mm |
| CGS38F9 | 38.0 | 3 | 3.0 | 60° | 28.3 | 41 | 17.2 | 145.6 | 105.0 | 43.2 | 10.5 |

# GS38 喂入链、提升链 GS38 Feeding Chain, Lifting Chain

CHOHO



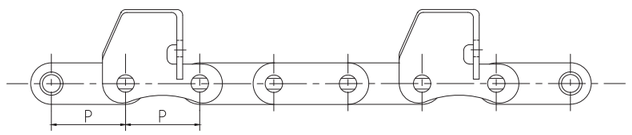


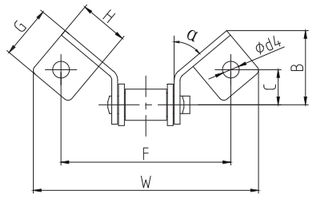


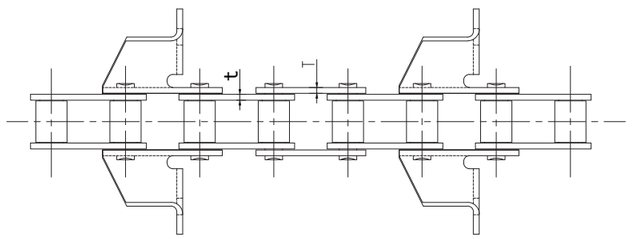


| 征和链号 CHOHO Chain No. | P | T | t | α | G | B | C | W | F | H | d4 |
|---|---|---|---|---|---|---|---|---|---|---|---|
| | mm | mm | mm | / | mm | mm | mm | mm | mm | mm | mm |
| CGS38SEL | 38.0 | 3 | 3.0 | 50° | 27.0 | / | 18.0 | 115.5 | 87.0 | 25.0 | 8.5 |

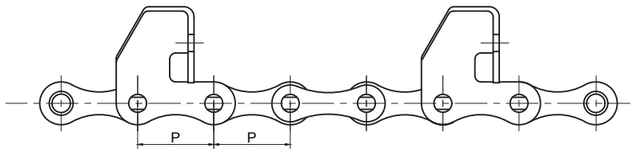


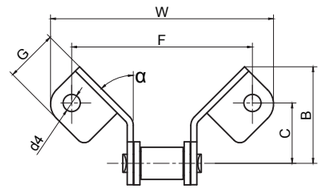


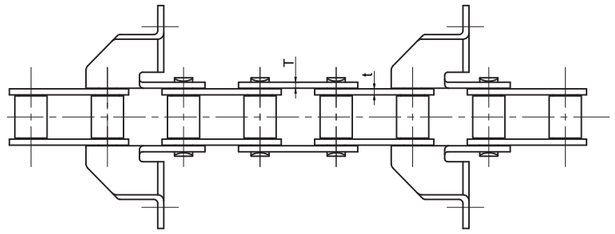


| 征和链号 CHOHO Chain No. | P | T | t | α | G | B | C | W | F | d4 |
|---|---|---|---|---|---|---|---|---|---|---|
| | mm | mm | mm | / | mm | mm | mm | mm | mm | mm |
| GS38F11 | 38.0 | 3 | 3.0 | 45° | 26.251 | 48 | 30.0 | 111 | 90.0 | 8.5 |

# S型钢制农机链及附件 S Type Steel Agricultural Chains and Accessories





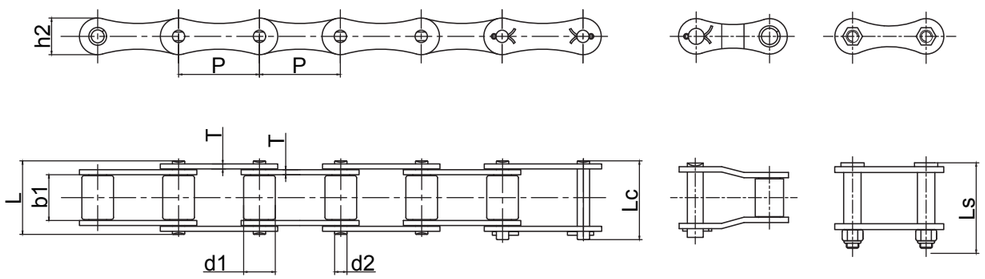


| 征和链号 CHOHO Chain No. | 节距 | 滚子直径 | 销轴直径 | 内节内宽 | 销轴长度 | | | 内链板高度 | 链板厚度 | 抗拉强度 | 平均抗拉强度 | 每米重量 |
|---|---|---|---|---|---|---|---|---|---|---|---|---|
| | P | d1 max | d2 max | b1 min | L max | Lc max | Ls max | h2 max | T max | Q min | $Q_0$ | q |
| | mm | mm | mm | mm | mm | mm | mm | mm | mm | kN | kN | kg/m |
| S32 | 29.21 | 11.43 | 4.45 | 15.88 | 27.0 | 28.9 | / | 13.2 | 1.8 | 8.0 | 21.6 | 0.86 |
| S42 | 34.93 | 14.27 | 7.00 | 19.05 | 34.8 | 37.5 | / | 19.8 | 2.8 | 27.0 | 50.8 | 1.60 |
| S51 | 38.10 | 15.24 | 5.72 | 16.00 | 31.9 | 34.0 | / | 17.3 | 2.8 | 17.8 | 30.8 | 1.48 |
| S52 | 38.10 | 15.24 | 5.72 | 22.23 | 38.2 | 40.9 | / | 17.3 | 2.8 | 17.8 | 36.1 | 1.68 |
| S413 | 41.30 | 16.00 | 8.28 | 22.23 | 40.2 | 43.0 | / | 20.5 | 3.0 | 50.0 | 60.0 | 1.98 |
| S413H | 41.30 | 16.00 | 8.28 | 22.23 | 43.7 | 46.5 | / | 20.5 | 4.0 | 50.0 | 70.0 | 2.35 |
| S45 | 41.40 | 15.24 | 5.72 | 22.23 | 38.2 | 40.9 | 46 | 17.3 | 2.8 | 17.8 | 36.1 | 1.66 |
| S55 | 41.40 | 17.78 | 5.72 | 22.23 | 38.2 | 40.9 | 46 | 17.3 | 2.8 | 17.8 | 36.1 | 1.66 |
| S55V | 41.40 | 17.78 | 8.28 | 22.23 | 39.5 | 43.0 | / | 20.0 | 3.0 | 42.0 | 60.0 | 2.16 |



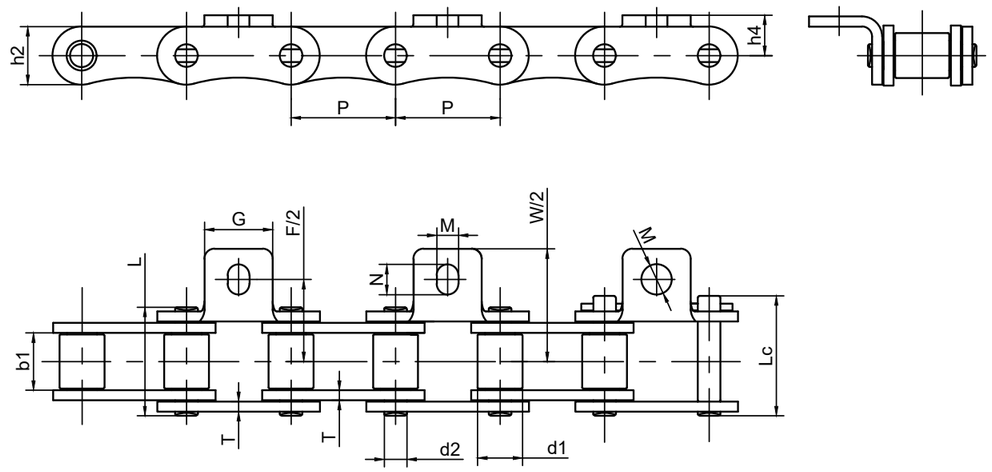


| 征和链号 CHOHO Chain No. | 节距 | 滚子直径 | 销轴直径 | 内节内宽 | 销轴长度 | | 链板尺寸 | | 附板尺寸 | | | | | | 抗拉强度 | 平均抗拉强度 |
|---|---|---|---|---|---|---|---|---|---|---|---|---|---|---|---|---|
| | P | d1 max | d2 max | b1 min | L max | Lc max | h2 max | T | h4 | F/2 | W/2 | M | N | G | Q min | $Q_0$ |
| | mm | mm | mm | mm | mm | mm | mm | mm | mm | mm | mm | mm | mm | mm | kN | kN |
| S55RH | 41.40 | 17.78 | 8.98 | 22.23 | 43.5 | 48.1 | 23.0 | 4.0 | 16.00 | 32.50 | 44.65 | 8.60 | 12.0 | 27.0 | 80.0 | 87.0 |
| S55RH-F1 | 41.40 | 25.00 | 8.98 | 22.23 | 43.5 | 48.1 | 23.0 | 4.0 | 16.00 | 32.50 | 44.65 | 8.60 | 12.0 | 27.0 | 80.0 | 87.0 |
| S55RH-F1(φ10.5) | 41.40 | 25.00 | 8.98 | 22.23 | 43.5 | 48.1 | 23.0 | 4.0 | 16.00 | 32.50 | 44.65 | 10.50 | | 27.0 | 80.0 | 87.0 |

# S型钢制农机链及附件 S Type Steel Agricultural Chains and Accessories





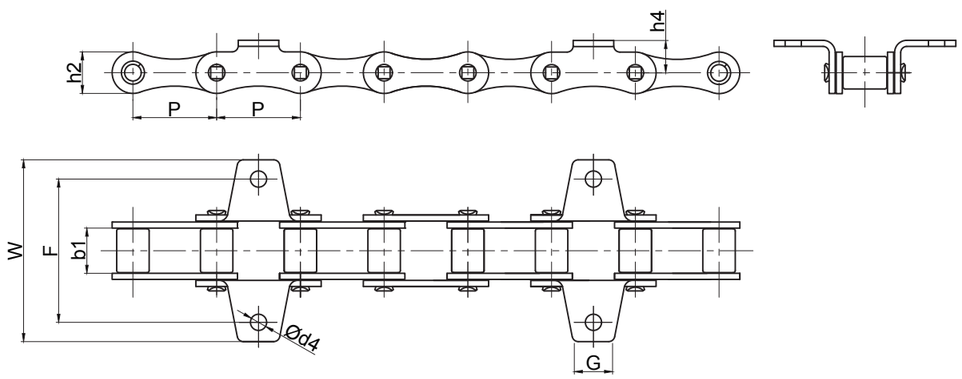


| 征和链号 CHOHO Chain No. | P | b1 | h2 | F | W | d4 | h4 | G |
|---|---|---|---|---|---|---|---|---|
| | mm | mm | mm | mm | mm | mm | mm | mm |
| S413K1 | 41.3 | 22.23 | 20.5 | 70.50 | 89.5 | 8.1 | 16.0 | 20.0 |
| S413K1S | 41.3 | 22.23 | 20.5 | 70.50 | 89.5 | 8.4 | 16.0 | 20.0 |
| S413HK1S | 41.3 | 22.23 | 20.5 | 70.50 | 95.7 | 10.5 | 16.0 | 20.0 |
| S413K1T | 41.3 | 22.23 | 20.5 | 70.5 | 89.5 | 10.4 | 16.0 | 20.0 |
| S32K1 | 29.2 | 15.9 | 13.2 | 42.9 | 61.0 | 5.3 | 8.6 | 15.0 |

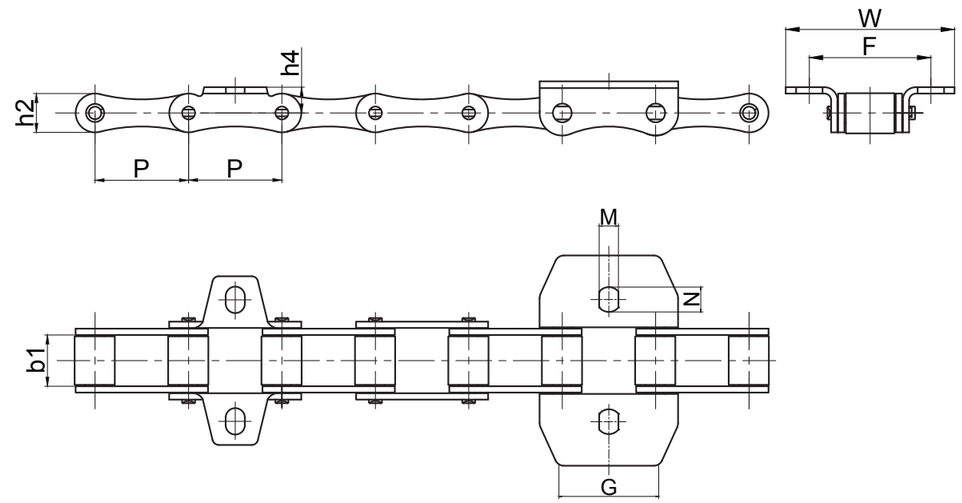


| 征和链号 CHOHO Chain No. | P | b1 | h2 | F | W | N | M | h4 | G |
|---|---|---|---|---|---|---|---|---|---|
| | mm | mm | mm | mm | mm | mm | mm | mm | mm |
| S55K1 | 41.4 | 22.23 | 17.3 | 54.0 | 75.0 | 11.7 | 8.5 | 11.4 | 22.0 |
| S55VK1 | 41.4 | 22.23 | 20.0 | 54.0 | 94.0 | 11.0 | 8.5 | 14.0 | 45.0 |
| S45K1 | 41.4 | 22.23 | 17.3 | 54.0 | 75.0 | 11.7 | 8.5 | 11.4 | 22.0 |
| S51K1 | 41.4 | 16.00 | 17.3 | 49.8 | 71.0 | 9.9 | 8.3 | 11.4 | 19.0 |
| S55VK1F2 | 41.4 | 22.23 | 20.0 | 52.7 | 82.0 | 11.5 | 8.3 | 13.4 | 34.0 |

# S型钢制农机链及附件 S Type Steel Agricultural Chains and Accessories

CHOHO



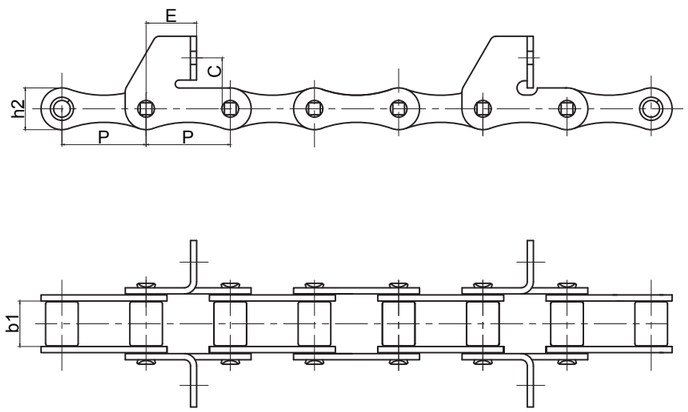


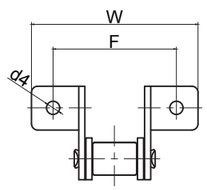


| 征和链号 CHOHO Chain No. | P | h2 | b1 | E | F | W | C | d4 |
|---|---|---|---|---|---|---|---|---|
| | mm | mm | mm | mm | mm | mm | mm | mm |
| S413F1 | 41.3 | 22.23 | 20.5 | 25.8 | 60.7 | 82.0 | 25.0 | 6.3 |
| S413F2 | 41.3 | 22.23 | 20.5 | 29.0 | 60.0 | 84.0 | 24.2 | 6.5 |
| S413F4 | 41.3 | 22.23 | 20.5 | 29.0 | 60.0 | 84.0 | 24.2 | 8.4 |



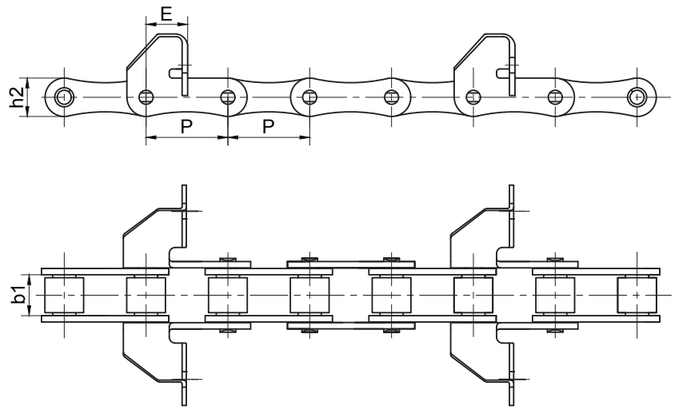


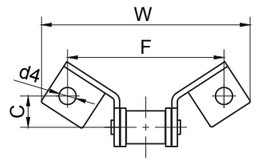


| 征和链号 CHOHO Chain No. | P | b1 | h2 | C | E | F | W | h4 | d4 |
|---|---|---|---|---|---|---|---|---|---|
| | mm | mm | mm | mm | mm | mm | mm | mm | mm |
| S55VSEL | 41.4 | 22.23 | 20 | 18.0 | 31.0 | 87.5 | 116 | 38.0 | 8.5 |

# S型钢制农机链及附件 S Type Steel Agricultural Chains and Accessories





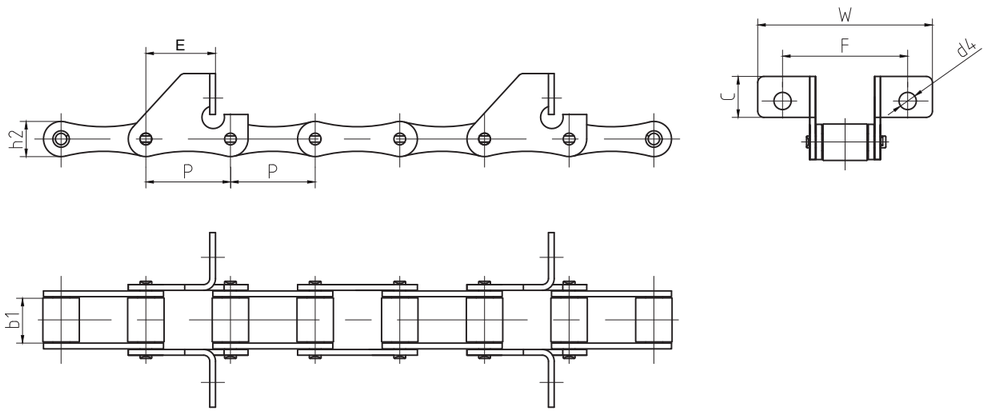


| 征和链号 CHOHO Chain No. | P | b1 | h2 | E | F | W | C | d4 |
|---|---|---|---|---|---|---|---|---|
| | mm | mm | mm | mm | mm | mm | mm | mm |
| S55F1 | 41.4 | 22.23 | 17.3 | 34.0 | 58.0 | 85.5 | 20.0 | 8.5 |
| S55F3 | 41.4 | 22.23 | 17.3 | 34.0 | 57.5 | 85.5 | 20.0 | 8.5 |
| S55FV | 41.4 | 22.23 | 17.3 | 28.6 | 57.5 | 83.4 | 21.0 | 6.5 |
| S55F1(φ6.5) | 41.4 | 22.23 | 17.3 | 34.0 | 58.0 | 85.5 | 20.0 | 6.5 |
| S55VK1F1 | 41.4 | 22.23 | 20.0 | 28.0 | 54.0 | 85.0 | 21.0 | 6.5 |

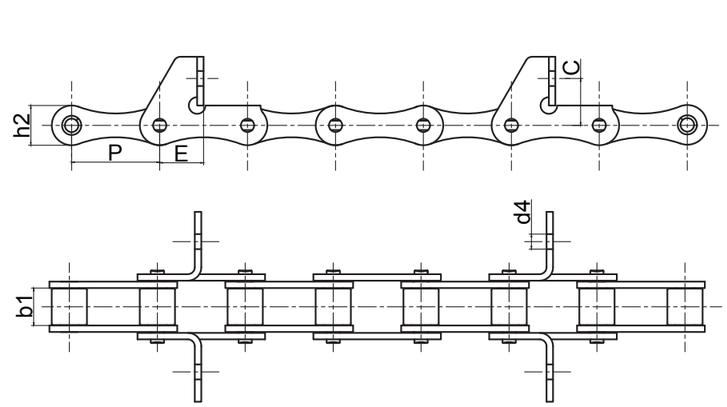


| 征和链号 CHOHO Chain No. | P | b1 | h2 | C | E | F | W | d4 |
|---|---|---|---|---|---|---|---|---|
| | mm | mm | mm | mm | mm | mm | mm | mm |
| S51SDF4 | 38.10 | 16.00 | 17.3 | 20.30 | 19.0 | 54.4 | 82.2 | 6.5 |
| S52F4 | 38.10 | 16.00 | 17.3 | 20.30 | 19.0 | 56.4 | 82.2 | 6.5 |
| S52SD | 38.10 | 22.23 | 17.3 | 20.30 | 19.0 | 62.0 | 88.8 | 6.5 |

# S型钢制农机链及附件 S Type Steel Agricultural Chains and Accessories





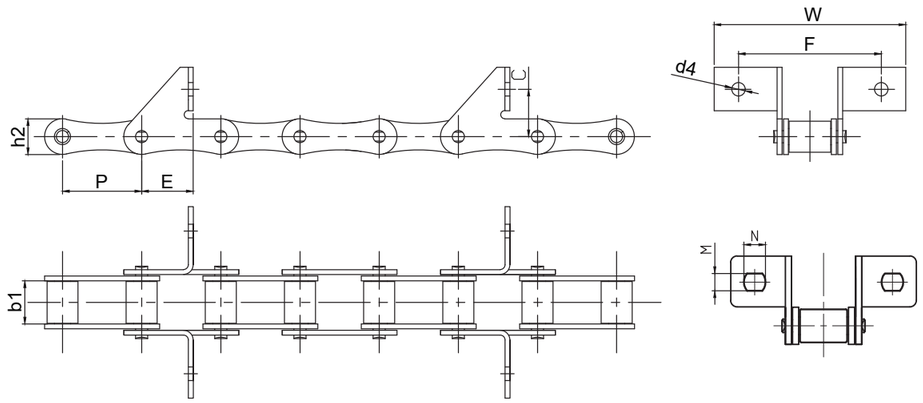


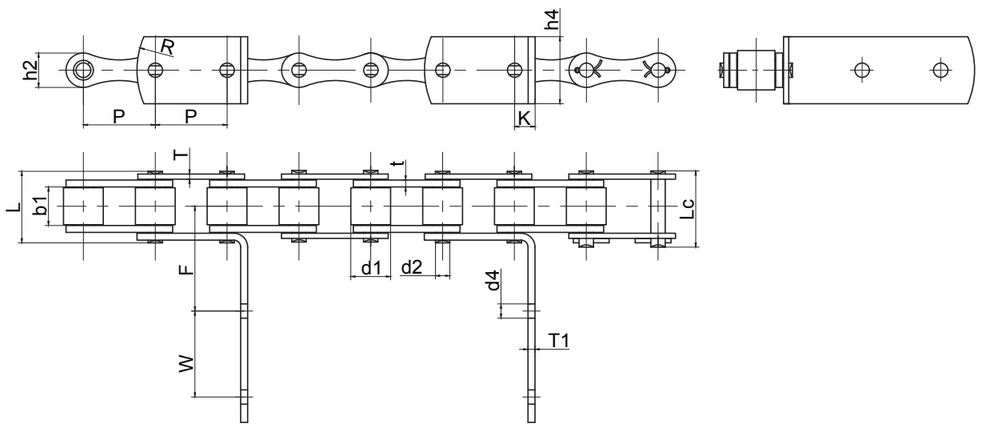


| 征和链号 CHOHO Chain No. | P | b1 | h2 | C | E | F | W | d4 | |
|---|---|---|---|---|---|---|---|---|---|
| | mm | mm | mm | mm | mm | mm | mm | mm | |
| S32F4 | 29.21 | 15.88 | 13.2 | 20.0 | 19.0 | 58.0 | 76.0 | 5 | |
| S45F1 | 41.40 | 22.23 | 17.2 | 21.0 | 28.5 | 62.4 | 83.4 | 8.5 | |
| S45F3 | 41.40 | 22.23 | 17.2 | 20.0 | 34.0 | 63.5 | 88.5 | N:11 | M:8.5 |
| S45F4 | 41.40 | 22.23 | 17.2 | 20.5 | 33.2 | 58.0 | 85.6 | 6.6 | |

| 征和链号 CHOHO Chain No. | 节距 | 滚子直径 | 销轴直径 | 内节内宽 | 销轴长度 | | 链板尺寸 | | | 附板尺寸 | | | | | | | 抗拉强度 |
|---|---|---|---|---|---|---|---|---|---|---|---|---|---|---|---|---|---|
| | P | d1 max | d2 max | b1 min | L max | Lc max | h2 max | T | t | T1 | h4 | F | W | K | d4 | R | Q min |
| | mm | mm | mm | mm | mm | mm | mm | mm | mm | mm | mm | mm | mm | mm | mm | mm | kN |
| S55HF2 | 41.4 | 23 | 8.28 | 22.23 | 42 | 44.6 | 20.0 | 3.0 | 4.0 | 4.0 | 39.0 | 61.0 | 50.0 | 11.8 | 8.3 | 50.0 | 47.5 |

# S型钢制农机链及附件 S Type Steel Agricultural Chains and Accessories



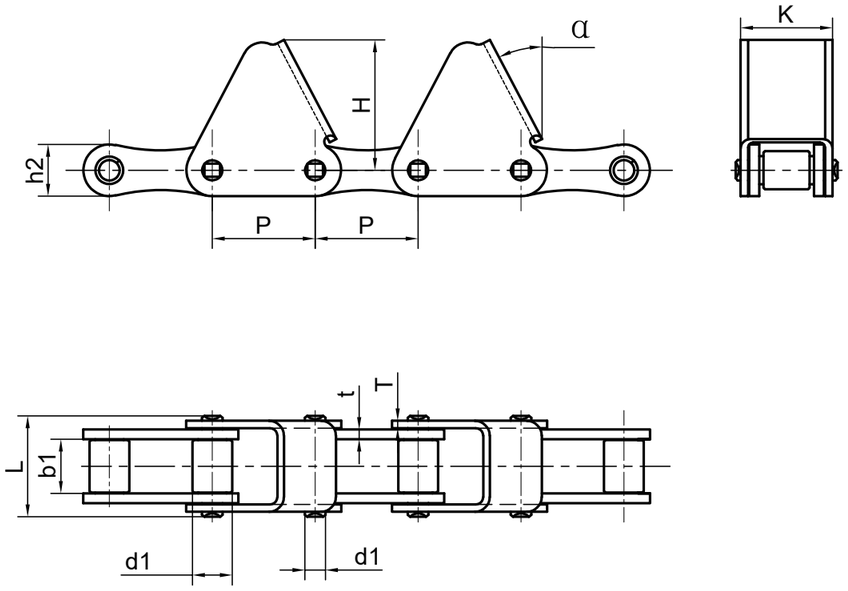


| 征和链号 CHOHO Chain No. | 节距 | 滚子直径 | 销轴直径 | 内节内宽 | 销轴长度 | 链板尺寸 | | | 附板尺寸 | | |
|---|---|---|---|---|---|---|---|---|---|---|---|
| | P | d1 max | d2 max | b1 min | L max | h2 max | T | t | H | K | α |
| | mm | mm | mm | mm | mm | mm | mm | mm | mm | mm | / |
| S414-CPEF1 | 41.4 | 16 | 8.28 | 22.00 | 41 | 21.0 | 3.0 | 4.0 | 53.0 | 37.0 | 27.5 |





# A 型钢制农机链及附件 A Type Steel Agricultural Chains and Accessories



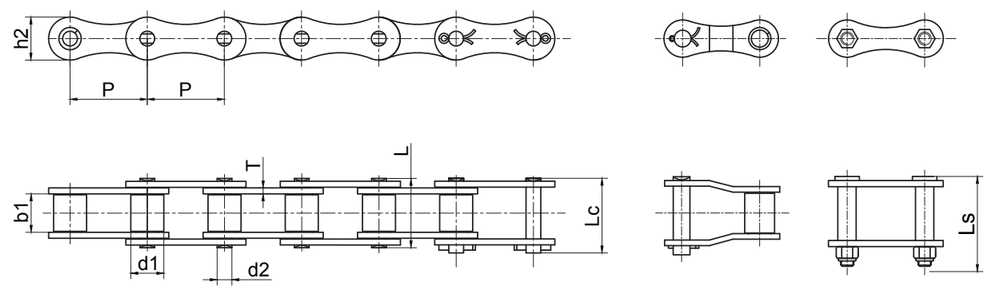


| 征和链号 CHOHO Chain No. | 节距 | 滚子直径 | 内节内宽 | 销轴直径 | 销轴长度 | | | 链板尺寸 | | 抗拉强度 | 平均抗拉强度 | 每米重量 |
|---|---|---|---|---|---|---|---|---|---|---|---|---|
| | P | d1 max | b1 min | d2 max | L max | Lc max | Ls max | h2 max | T | Q min | $Q_0$ | q |
| | mm | mm | mm | mm | mm | mm | mm | mm | mm | kN | kN | kg/m |
| A557 | 41.40 | 17.78 | 20.24 | 8.00 | 37.4 | 41.0 | 46.8 | 23.1 | 3.20 | 55.67 | 74.3 | 2.45 |

# A 型钢制农机链及附件 A Type Steel Agricultural Chains and Accessories

CHOHO



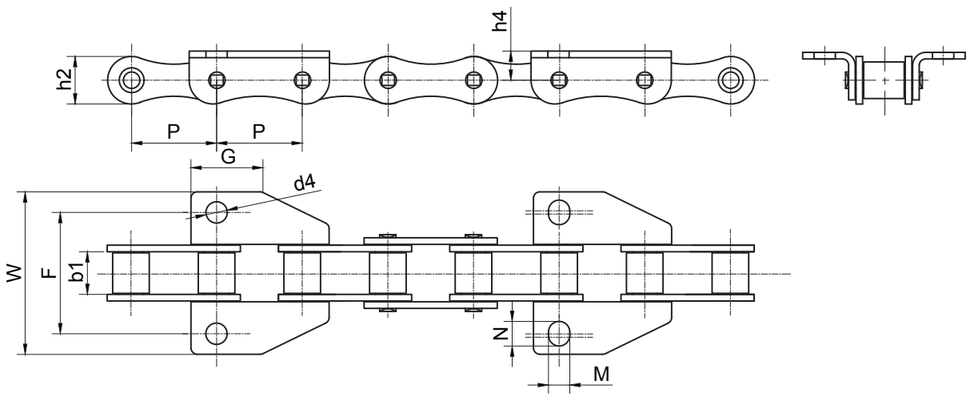


| 征和链号 CHOHO Chain No. | P | h2 | h4 | b1 | F | W | d4 | G | N | M |
|---|---|---|---|---|---|---|---|---|---|---|
| | mm | mm | mm | mm | mm | mm | mm | mm | mm | mm |
| A557K39 | 41.4 | 23.1 | 13.5 | 20.24 | 57.15 | 78.6 | 10.3 | 34.0 | / | / |
| A557K35MS | 41.4 | 23.1 | 13.5 | 20.24 | 63.5 | 88.0 | / | 30.0 | 11.9 | 10.3 |
| A557K39MF1 | 41.4 | 23.1 | 14.2 | 20.24 | 57.15 | 77.8 | 10.3 | 31.0 | / | / |
| A557K39MF2 | 41.4 | 23.1 | 13.5 | 20.24 | 56.7 | 78.1 | 10.3 | 34.0 | / | / |
| A557K39MF7 | 41.4 | 23.1 | 13.5 | 20.24 | 63.5 | 88.0 | 11.0 | 30.0 | / | / |



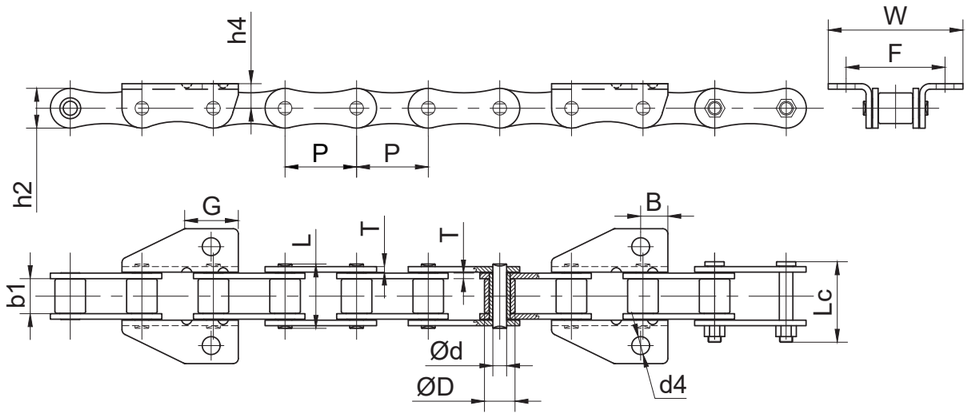


| 征和链号 CHOHO Chain No. | 节距 | 滚子直径 | 销轴直径 | 内节内宽 | 销轴长度 | | 链板尺寸 | | 附板尺寸 | | | | | | 抗拉强度 |
|---|---|---|---|---|---|---|---|---|---|---|---|---|---|---|---|
| | P | φD max | φd min | b1 min | L max | Lc max | h2 max | T max | B | d4 | h4 | G | W | F | Q min |
| | mm | mm | mm | mm | mm | mm | mm | mm | mm | mm | mm | mm | mm | mm | kN |
| A557WK39MF1-HDS | 41.4 | 17.7 | 7.94 | 20.24 | 37.4 | 46.5 | 23.1 | 3.2 | 15.7 | 10.3 | 14.2 | 31 | 77.8 | 57.15 | 55.67 |

# A 型钢制农机链及附件 A Type Steel Agricultural Chains and Accessories





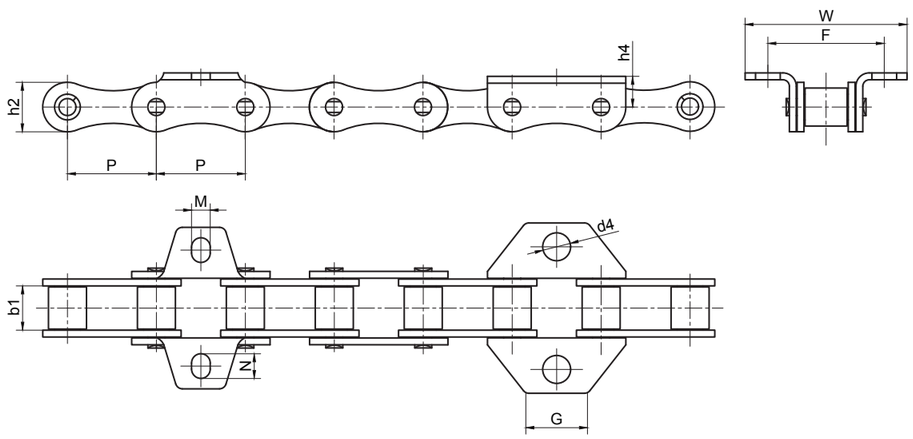


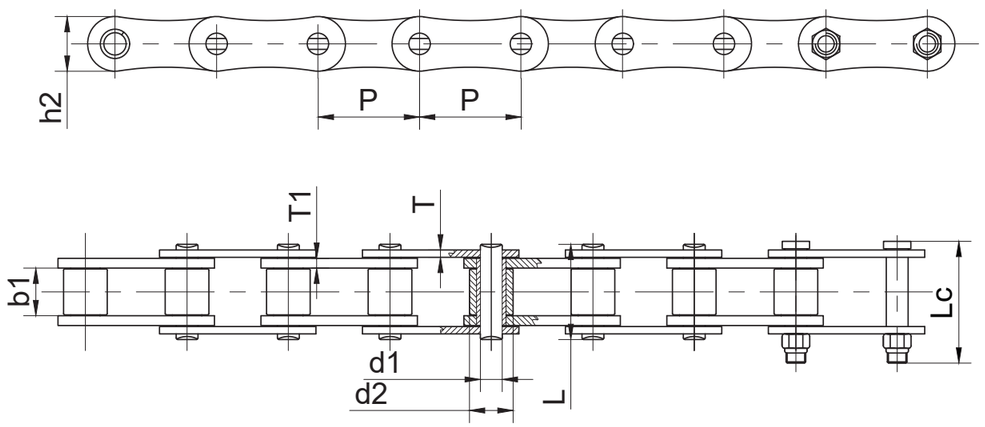


| 征和链号 CHOHO Chain No. | P | h2 | b1 | h4 | F | W | M | N | d4 | G |
|---|---|---|---|---|---|---|---|---|---|---|
| | mm | mm | mm | mm | mm | mm | mm | mm | mm | mm |
| A557-K19 | 41.4 | 23.1 | 20.24 | 15.9 | 54.00 | 75.2 | 8.7 | 11.5 | / | 22.0 |
| A557-AK27S | 41.4 | 23.1 | 20.24 | 14.3 | 57.10 | 79.3 | / | / | 14.3 | 29.0 |

| 征和链号 CHOHO Chain No. | 节距 | 滚子直径 | 销轴直径 | 内节内宽 | 销轴长度 | | 链板尺寸 | | | 抗拉强度 |
|---|---|---|---|---|---|---|---|---|---|---|
| | P | d1 max | d2 max | b1 min | L max | Lc max | h2 max | T1 max | T max | Q min |
| | mm | mm | mm | mm | mm | mm | mm | mm | mm | kN |
| A960H | 41.40 | 17.78 | 8.90 | 19.05 | 38.8 | 48.2 | 22.3 | 4.00 | 3.00 | 66.00 |

# A 型钢制农机链及附件 A Type Steel Agricultural Chains and Accessories





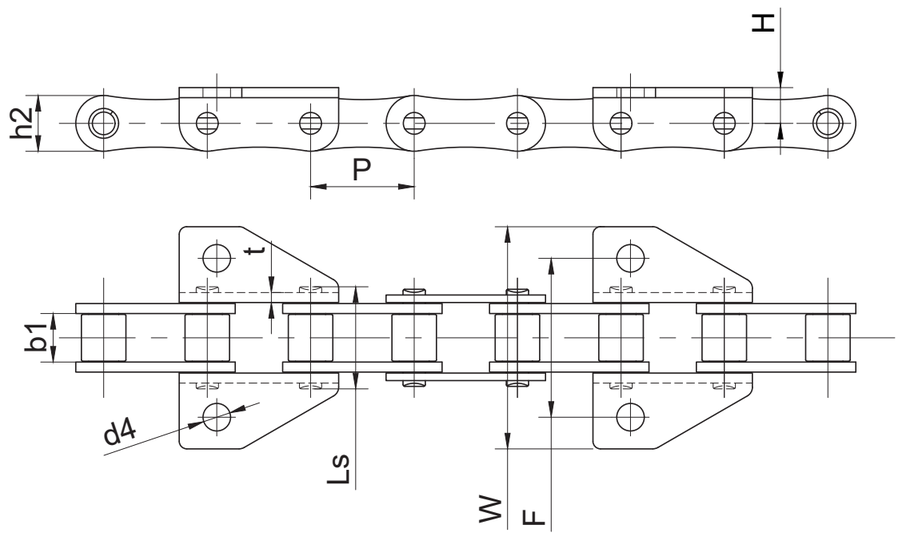


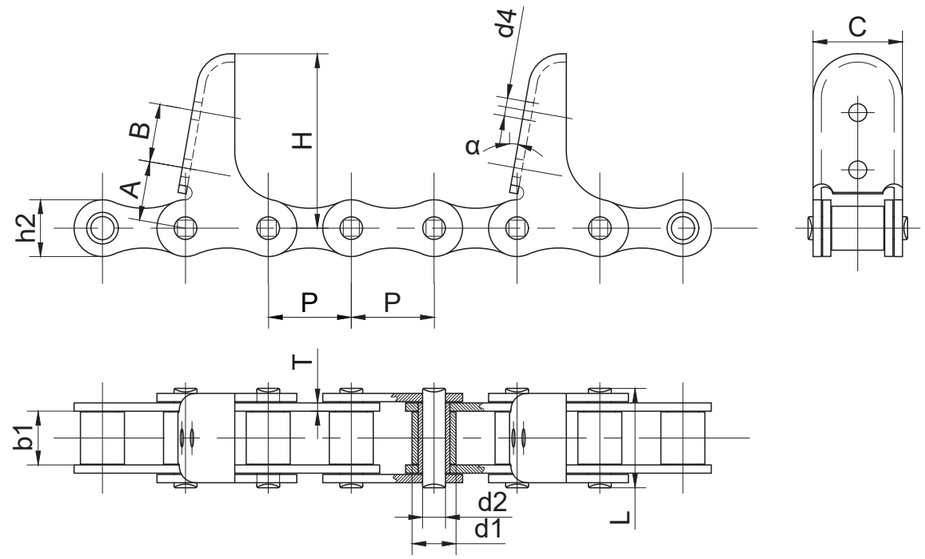


| 征和链号 CHOHO Chain No. | P | h2 | H | b1 | F | W | d4 | t | Ls |
|---|---|---|---|---|---|---|---|---|---|
| | mm | mm | mm | mm | mm | mm | mm | mm | mm |
| A960HK39 | 41.4 | 22.3 | 14.3 | 19.05 | 63.50 | 88.8 | 11.0 | 4.0 | 40.8 |

| 征和链号 CHOHO Chain No. | 节距 | 滚子直径 | 销轴直径 | 内节内宽 | 销轴长度 | 链板尺寸 | | 附板尺寸 | | | | | | 抗拉强度 |
|---|---|---|---|---|---|---|---|---|---|---|---|---|---|---|
| | P | d1 max | d2 min | b1 min | L max | h2 max | T max | A | B | C | d4 | H | α | Q min |
| | mm | mm | mm | mm | mm | mm | mm | mm | mm | mm | mm | mm | ° | kN |
| A627-CPEF1 | 30.00 | 15.88 | 8.28 | 19.05 | 36.1 | 20.5 | 3.00 | 21.4 | 21.00 | 32.30 | 6.5 | 63.00 | 10° | 50.00 |

# C/CA 型钢制农机链及附件 C/CA Type Steel Agricultural Chains and Accessories

CHOHO



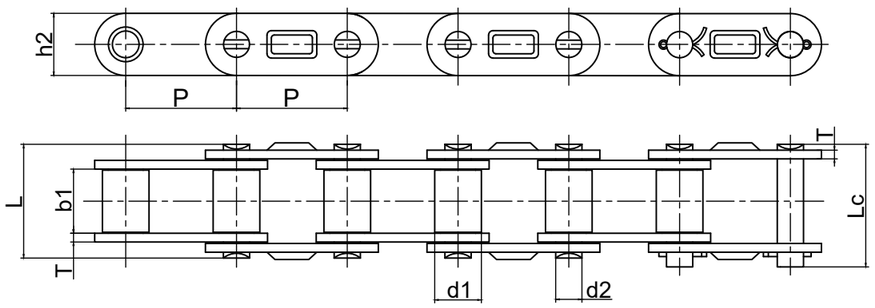


| 征和链号 CHOHO Chain No. | 节距 | 滚子直径 | 内节内宽 | 销轴直径 | 销轴长度 | | 链板尺寸 | | 抗拉强度 | 平均抗拉强度 | 每米重量 |
|---|---|---|---|---|---|---|---|---|---|---|---|
| | P | d1 max | b1 min | d2 max | L max | Lc max | h2 max | T max | Q min | $Q_0$ | q |
| | mm | mm | mm | mm | mm | mm | mm | mm | kN | kN | kg/m |
| CA627 | 30.00 | 15.88 | 19.05 | 8.28 | 36.10 | 39.40 | 20.5 | 3.00 | 50.00 | 55.0 | 2.51 |
| C2060HC6E | 38.10 | 11.91 | 12.57 | 5.94 | 29.7 | 30.90 | 18.10 | 3.20 | 31.8 | 41.6 | 1.44 |
| CA620 | 40.25 | 17.67 | 24.51 | 7.19 | 41.70 | 45.50 | 20.20 | 3.10 | 39.10 | 55.1 | 2.35 |
| CA555 | 41.40 | 16.70 | 12.70 | 7.19 | 30.40 | 33.80 | 19.30 | 3.20 | 42.00 | 58.0 | 1.72 |
| CA550HC6E | 41.40 | 16.7 | 19.81 | 7.19 | 37.00 | 40.50 | 20.20 | 3.10 | 50.00 | 60.0 | 2.00 |
| CA620-P42.01 | 42.01 | 17.67 | 24.51 | 7.19 | 41.70 | 45.50 | 20.20 | 3.10 | 39.10 | 55.1 | 2.46 |

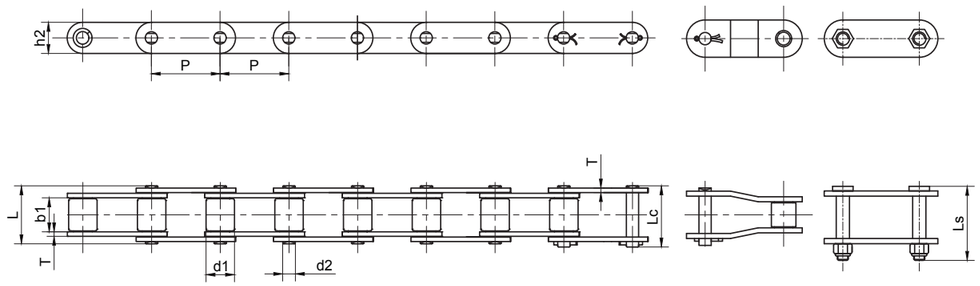


| 征和链号 CHOHO Chain No. | 节距 | 滚子直径 | 内节内宽 | 销轴直径 | 销轴长度 | | | 链板尺寸 | | 抗拉强度 | 平均抗拉强度 | 每米重量 |
|---|---|---|---|---|---|---|---|---|---|---|---|---|
| | P | d1 max | b1 min | d2 max | L max | Lc max | Ls max | h2 max | T max | Q min | $Q_0$ | q |
| | mm | mm | mm | mm | mm | mm | mm | mm | mm | kN | kN | kg/m |
| 38.4R | 38.4 | 15.88 | 19.05 | 6.92 | 33.80 | 36.40 | / | 17.30 | 2.50 | 33.00 | 41.2 | 1.70 |
| 38.4V | 38.4 | 15.88 | 18 | 6.92 | 35.00 | 38.00 | / | 17.30 | 3.00 | 33.00 | 45.0 | 1.83 |
| 38.4VB | 38.4 | 15.88 | 19.05 | 8.28 | 36.10 | 39.40 | / | 20.50 | 3.00 | 50.00 | 62.5 | 2.17 |
| 55VD | 41.4 | 17.9 | 22.5 | 9.00 | 39.50 | 42.50 | / | 23.0 | 3.00 | 50.00 | 62.0 | 2.43 |
| CA550 | 41.4 | 16.7 | 19.81 | 7.19 | 35.00 | 38.80 | 43.5 | 20.20 | 2.80 | 44.00 | 51.2 | 1.94 |
| CA550H | 41.4 | 16.7 | 19.81 | 7.19 | 37.00 | 40.50 | / | 20.20 | 3.10 | 50.00 | 60.0 | 2.00 |
| CA550V | 41.4 | 16.87 | 19.05 | 8.28 | 36.00 | 39.30 | 46.4 | 20.20 | 3.10 | 55.00 | 60.0 | 2.24 |
| CA557 | 41.4 | 17.78 | 20.24 | 7.94 | 37.65 | 41.15 | 46.8 | 23.10 | 3.20 | 55.67 | 74.3 | 2.60 |
| CA620 | 42.01 | 17.67 | 24.51 | 7.19 | 41.70 | 45.50 | / | 20.20 | 3.10 | 39.10 | 55.1 | 2.35 |
| CA620-P42.01 | 42.01 | 17.67 | 24.51 | 7.19 | 41.70 | 45.50 | / | 20.20 | 3.10 | 39.10 | 55.1 | 2.46 |
| CA620-B31-P42.01 | 42.01 | 17.91 | 31 | 7.19 | 48.00 | 51.70 | / | 20.2 | 3.10 | 39.10 | 55.1 | 2.81 |
| C2060 | 38.1 | 11.91 | 12.57 | 5.94 | 25.9 | 28.10 | / | 18.1 | 2.42 | 31.3 | 36.8 | 1.12 |
| C2060H | 38.1 | 11.91 | 12.57 | 5.94 | 29.7 | 30.90 | / | 18.1 | 3.20 | 31.8 | 41.6 | 1.44 |
| C2060HT | 38.1 | 11.91 | 12.57 | 5.94 | 29.7 | 30.90 | / | 18.1 | 3.20 | 48.1 | 54 | 1.44 |

# 过桥链系列 Bridge Chain Series





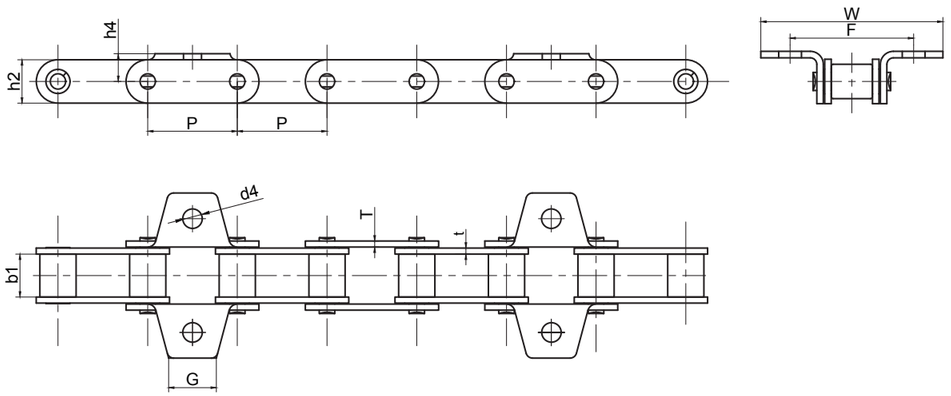


| 征和链号 CHOHO Chain No. | P | h2 | b1 | h4 | T | t | F | W | G | d4 |
|---|---|---|---|---|---|---|---|---|---|---|
| | mm | mm | min | mm | mm | mm | mm | mm | mm | mm |
| 38.4VF3K1 | 38.4 | 17.3 | 18.00 | 15.0 | 3.0 | 3.0 | 58.0 | 80.0 | 20.0 | 9.0 |
| 38.4RK1F2 | 38.4 | 17.6 | 19.05 | 14.5 | 2.5 | 2.5 | 58.0 | 80.0 | 20.0 | 9.0 |
| CA550A29 | 41.4 | 20.2 | 19.80 | 12.8 | 2.8 | 2.8 | 50.8 | 71.4 | 22.2 | 10.5 |
| CA550VK1F1 | 41.4 | 20.2 | 19.05 | 16.5 | 3.1 | 3.1 | 50.8 | 75.5 | 27.0 | 8.5 |

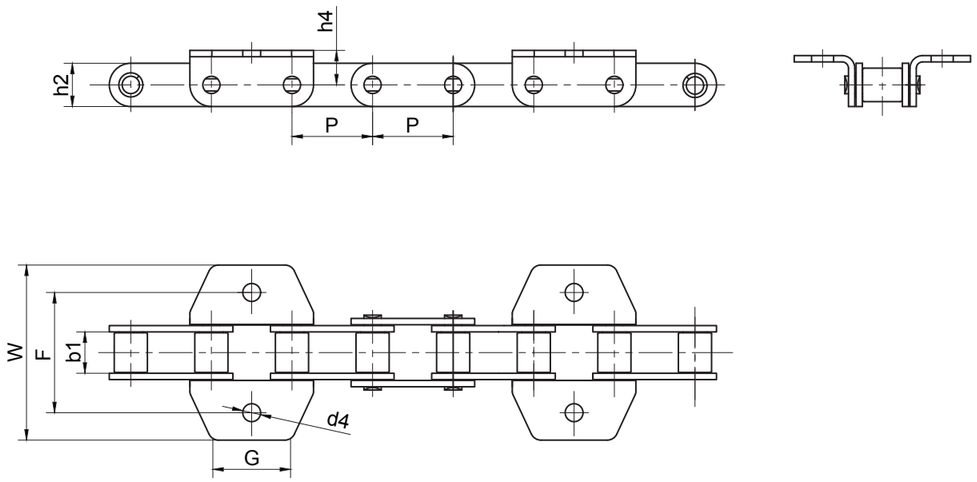


| 征和链号 CHOHO Chain No. | P | h2 | b1 | h4 | F | W | G | d4 |
|---|---|---|---|---|---|---|---|---|
| | mm | mm | min | mm | mm | mm | mm | mm |
| 38.4RK1 | 38.4 | 17.3 | 19.05 | 15.1 | 58.0 | 76.5 | 40.0 | 8.5 |
| 38.4RK1F6 | 38.4 | 17.3 | 19.05 | 15.5 | 57.0 | 80.0 | 40.0 | 10.5 |
| 38.4VK1 | 38.4 | 17.3 | 18.00 | 16.5 | 57.0 | 75.0 | 40.0 | 8.5 |

# 过桥链系列 Bridge Chain Series





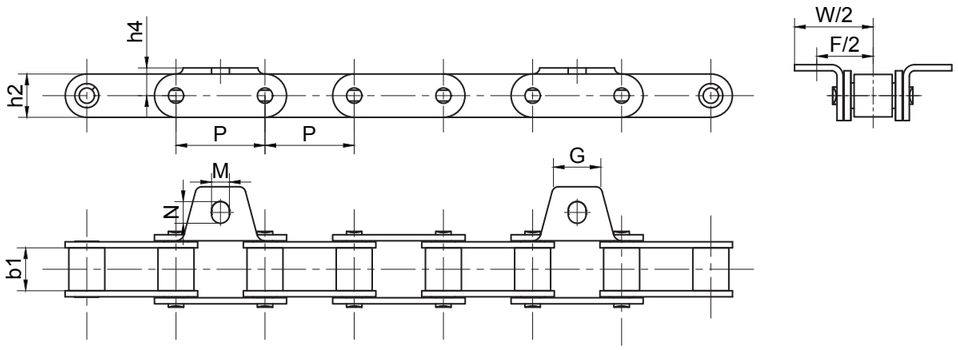


| 征和链号 CHOHO Chain No. | P | h2 | b1 | h4 | F/2 | W/2 | G | M | N |
|---|---|---|---|---|---|---|---|---|---|
| | mm | mm | min | mm | mm | mm | mm | mm | mm |
| CA550A1 | 41.4 | 20.2 | 19.80 | 13 | 28.4 | 35.4 | 22.0 | 8.5 | 10.0 |

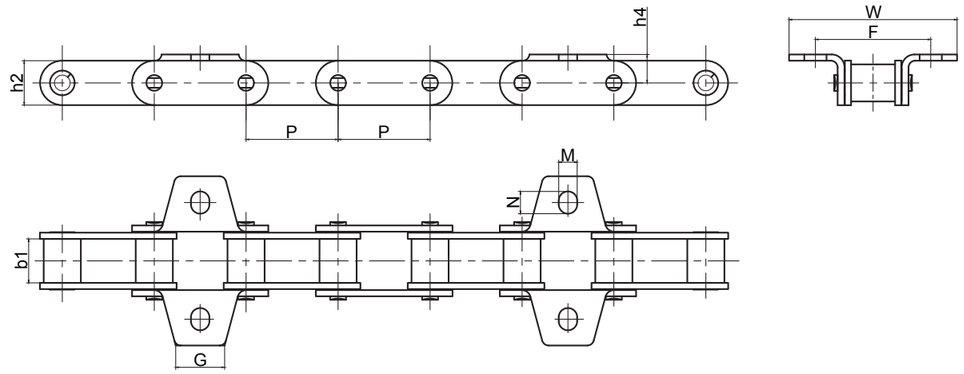


| 征和链号 CHOHO Chain No. | P | h2 | b1 | h4 | F | W | G | M | N |
|---|---|---|---|---|---|---|---|---|---|
| | mm | mm | min | mm | mm | mm | mm | mm | mm |
| CA550K1 | 41.4 | 20.2 | 19.80 | 12.7 | 52.5 | 76.2 | 22.0 | 8.3 | 10.0 |
| CA550-K40 | 41.4 | 20.2 | 19.80 | 12.8 | 54.0 | 80.0 | 30.0 | 8.3 | 11.5 |

# 过桥链系列 Bridge Chain Series

CHOHO



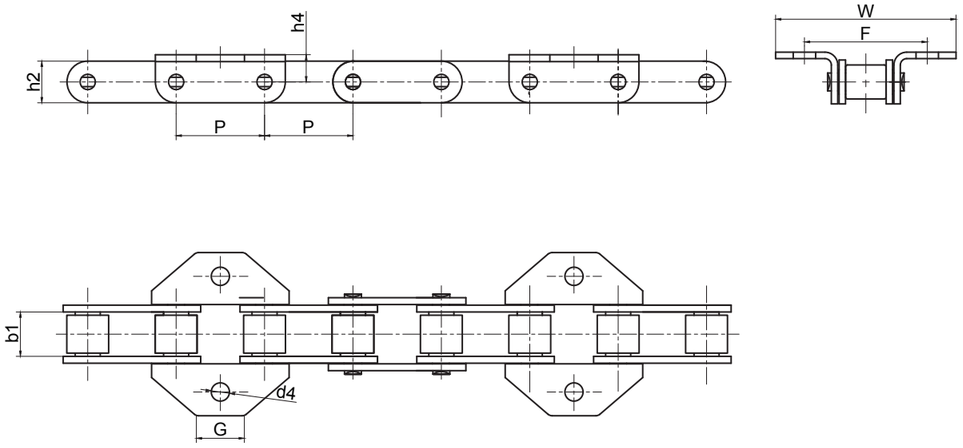


| 征和链号 CHOHO Chain No. | P | h2 | b1 | h4 | F | W | G | d4 |
|---|---|---|---|---|---|---|---|---|
| | mm | mm | min | mm | mm | mm | mm | mm |
| CA550HK1 | 41.4 | 20.2 | 19.80 | 12.7 | 54.0 | 71.5 | 22.6 | 8.5 |
| CA550V220B | 41.4 | 20.2 | 19.80 | 16.5 | 54.0 | 75.54 | 56.0 | 8.5 |
| CA550K18 | 41.4 | 20.2 | 19.80 | 12.7 | 54.0 | 71.60 | 22.47 | 10.3 |
| CA550VK18 | 41.4 | 20.2 | 19.05 | 12.7 | 54.0 | 71.60 | 22.47 | 10.3 |

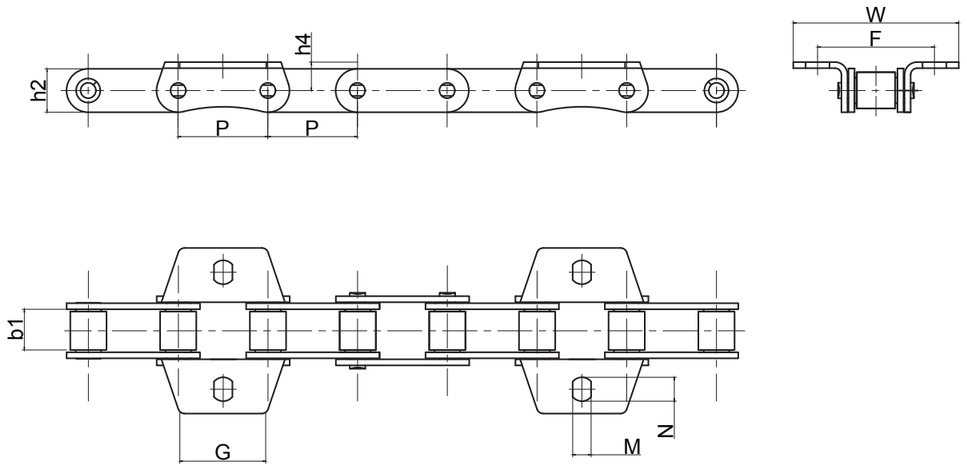


| 征和链号 CHOHO Chain No. | P | h2 | b1 | h4 | F | W | G | M | N |
|---|---|---|---|---|---|---|---|---|---|
| | mm | mm | mm | mm | mm | mm | mm | mm | mm |
| CA550K1F4 | 41.4 | 20.2 | 19.80 | 13.1 | 54.0 | 77.0 | 40.0 | 8.5 | 11.0 |
| CA550VK1F4 | 41.4 | 20.2 | 19.05 | 15 | 54.0 | 83.0 | 34.0 | 8.3 | 11.5 |

# 过桥链系列 Bridge Chain Series





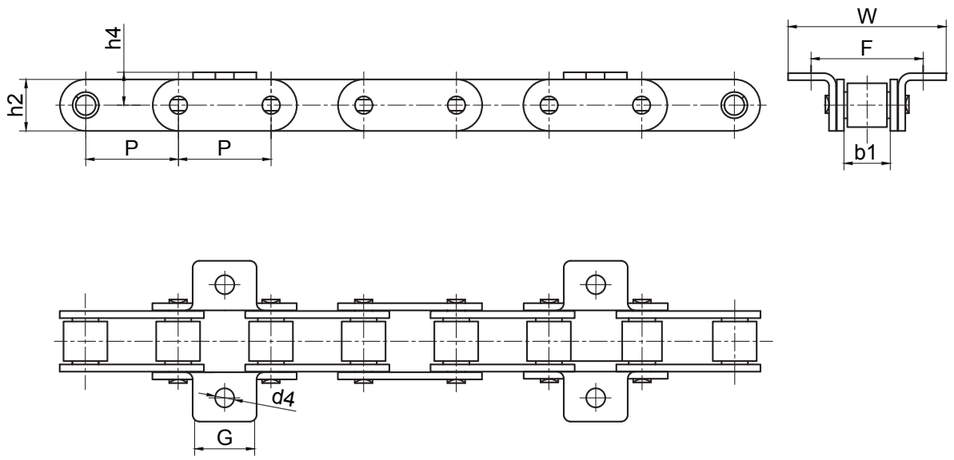


| 征和链号 CHOHO Chain No. | P | h2 | b1 | h4 | F | W | G | d4 |
|---|---|---|---|---|---|---|---|---|
| | mm | mm | mm | mm | mm | mm | mm | mm |
| CA557K1 | 41.4 | 23.0 | 20.24 | 14.7 | 50.8 | 72.0 | 28.3 | 8.5 |
| CA557K5 | 41.4 | 23.0 | 20.24 | 16.5 | 51.4 | 72.5 | 28.6 | 8.3 |

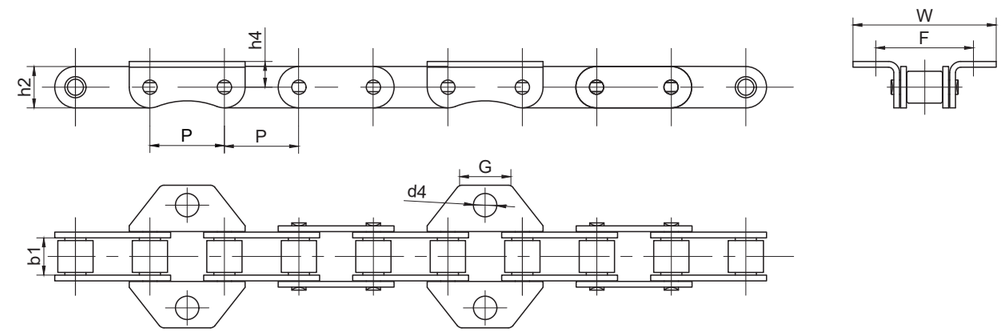


| 征和链号 CHOHO Chain No. | P | h2 | b1 | h4 | F | W | G | d4 |
|---|---|---|---|---|---|---|---|---|
| | mm | mm | mm | mm | mm | mm | mm | mm |
| CA557AK27S | 41.4 | 23.1 | 20.24 | 14.3 | 57.1 | 79.3 | 29.0 | 13.0 |

# 过桥链系列 Bridge Chain Series





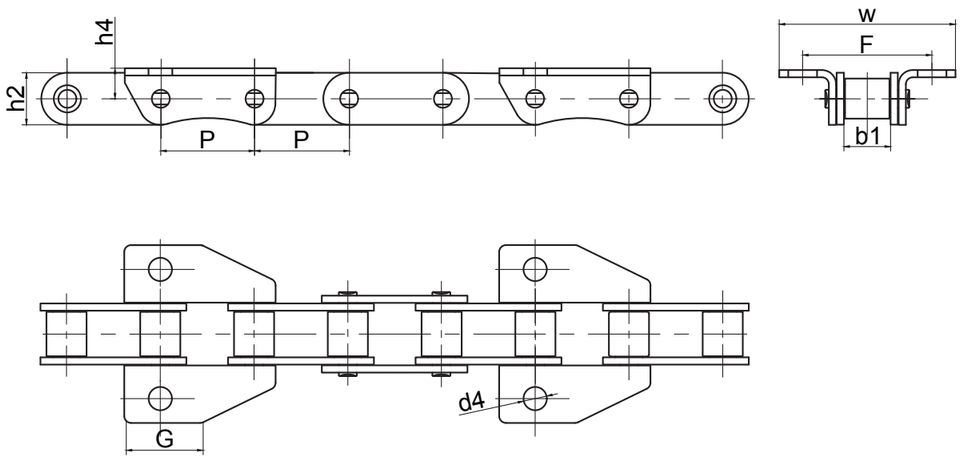


| 征和链号 CHOHO Chain No. | P | h2 | b1 | h4 | F | W | G | d4 | M | N |
|---|---|---|---|---|---|---|---|---|---|---|
| | mm | mm | mm | mm | mm | mm | mm | mm | mm | mm |
| CA557K39 | 41.4 | 23.0 | 20.24 | 12.7 | 57.15 | 77.8 | 31.0 | 12.7 | / | / |
| CA557K39(10.3) | 41.4 | 23.0 | 20.24 | 12.7 | 57.15 | 77.8 | 31.0 | 10.3 | / | / |
| CA557K39M(10.3) | 41.4 | 23.0 | 20.24 | 12.7 | 50.80 | 71.4 | 31.0 | 10.3 | / | / |
| CA557K39MF1 | 41.4 | 23.0 | 20.24 | 14.2 | 57.15 | 77.8 | 31.0 | 10.3 | / | / |
| CA557K39MF2 | 41.4 | 23.0 | 20.24 | 14.0 | 57.20 | 77.8 | 30.0 | / | 12.3 | 14.3 |
| CA557K39MF3 | 41.4 | 23.0 | 20.24 | 14.0 | 57.50 | 78.5 | 34.0 | 10.5 | / | / |
| CA557K39MF6 | 41.4 | 23.0 | 20.24 | 12.7 | 53.80 | 74.3 | 29.5 | / | 9.9 | 13.0 |



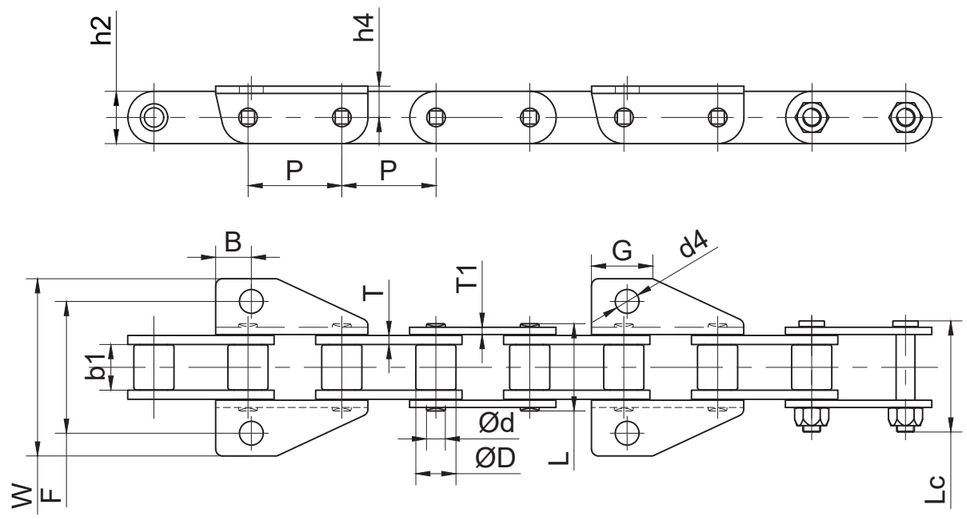


| 征和链号 CHOHO Chain No. | 节距 | 滚子直径 | 销轴直径 | 内节内宽 | 销轴长度 | | 链板尺寸 | | | 附板尺寸 | | | | | | 抗拉强度 |
|---|---|---|---|---|---|---|---|---|---|---|---|---|---|---|---|---|
| | P | d1 max | d2 max | b1 min | L max | Lc max | h2 max | T | T1 | B | G | d4 | h4 | W | F | Q min |
| | mm | mm | mm | mm | mm | mm | mm | mm | mm | mm | mm | mm | mm | mm | mm | kN |
| CA557HK39-HDS | 41.4 | 17.7 | 8.28 | 19.80 | 38.5 | 48.9 | 23.0 | 4.0 | 3.2 | 15.7 | 27.0 | 10.5 | 20.0 | 78.0 | 58.00 | 70 |

# 过桥链系列 Bridge Chain Series





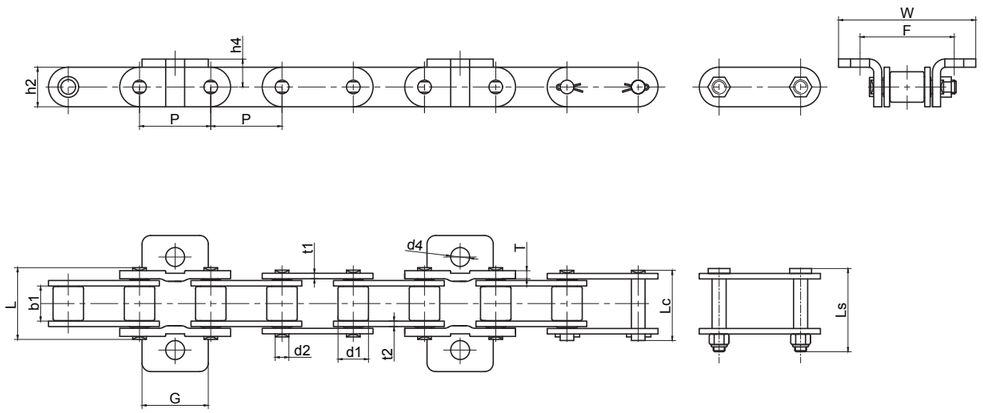


| 征和链号 CHOHO Chain No. | 节距 | 滚子直径 | 销轴直径 | 内节内宽 | 销轴长度 | | | 链板尺寸 | | | 附板尺寸 | | | | | | 抗拉强度 | 平均抗拉强度 |
|---|---|---|---|---|---|---|---|---|---|---|---|---|---|---|---|---|---|---|
| | P | d1 max | d2 max | b1 min | L max | Lc max | Ls max | h2 max | t1 | t2 | T | h4 | G | F | W | d4 | Q min | $Q_0$ |
| | mm | mm | mm | mm | mm | mm | mm | mm | mm | mm | mm | mm | mm | mm | mm | mm | kN | kN |
| CA557K7 | 41.4 | 17.7 | 7.94 | 20.24 | 38.9 | 42 | 47.7 | 23.0 | 3.2 | 3.2 | 4.7 | 16.2 | 38.5 | 54.0 | 79.0 | 11.0 | 55.67 | 70 |
| CA557K7-HDS | 41.4 | 17.7 | 7.94 | 20.24 | 38.9 | 42 | 47.7 | 23.0 | 3.2 | 3.5 | 4.7 | 16.2 | 38.5 | 54.0 | 79.0 | 11.0 | 55.67 | 70 |

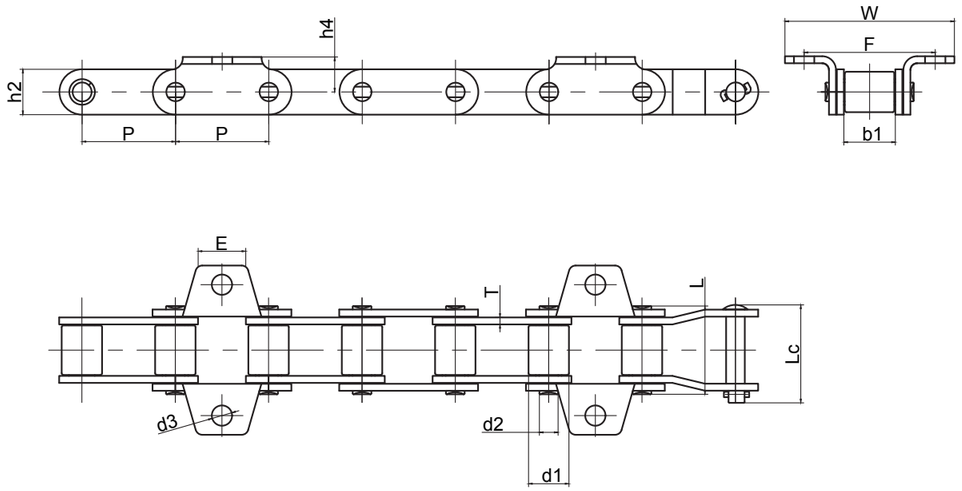


| 征和链号 CHOHO Chain No. | 节距 | 滚子直径 | 销轴直径 | 内节内宽 | 销轴长度 | | 链板尺寸 | | 附板尺寸 | | | | | 抗拉强度 | 平均抗拉强度 |
|---|---|---|---|---|---|---|---|---|---|---|---|---|---|---|---|
| | P | d1 max | d2 max | b1 min | L max | Lc max | h2 max | T | F | E | h4 | d4 | W | Q min | $Q_0$ |
| | mm | mm | mm | mm | mm | mm | mm | mm | mm | mm | mm | mm | mm | kN | kN |
| 55VDK1F1 | 41.400 | 17.9 | 8.28 | 22.50 | 39.3 | 43.4 | 20.2 | 3.1 | 58.0 | 22.0 | 15.5 | 9.0 | 75.0 | 50.0 | 60.0 |

# 过桥链系列 Bridge Chain Series





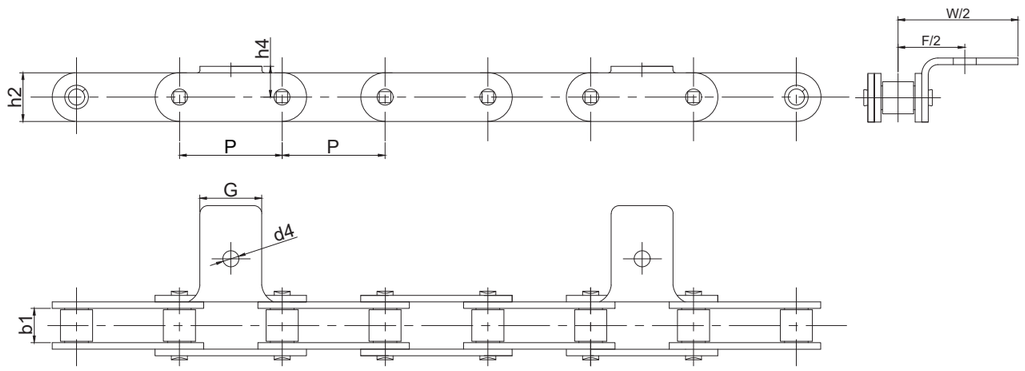


| 征和链号 CHOHO Chain No. | P | b1 | h2 | G | h4 | F | W | d4 | T |
|---|---|---|---|---|---|---|---|---|---|
| | mm | mm | mm | mm | mm | mm | mm | mm | mm |
| C2060HA1V1 | 38.1 | 12.57 | 18.1 | 23 | 14.81 | 49.6 | 93.2 | 6 | 3.2 |

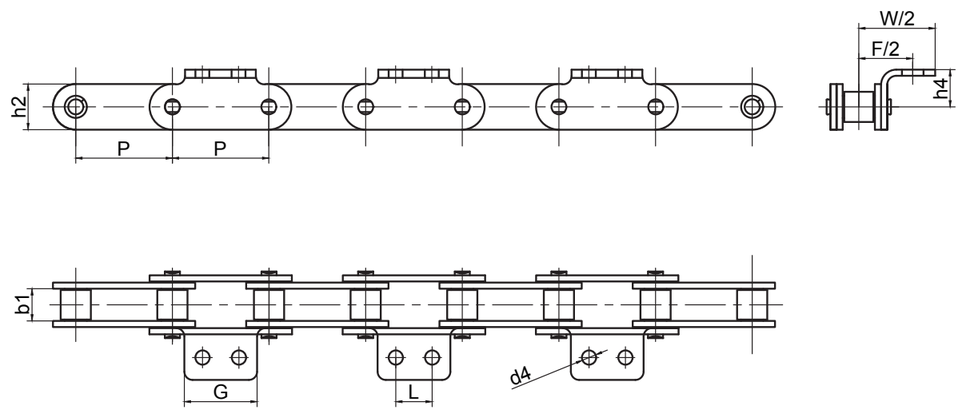


| 征和链号 CHOHO Chain No. | P | h2 | b1 | L | h4 | F | W | G | d4 |
|---|---|---|---|---|---|---|---|---|---|
| | mm | mm | mm | mm | mm | mm | mm | mm | mm |
| C2060HA2 | 38.1 | 18.10 | 12.57 | 14.3 | 14.7 | 42.8 | 60.4 | 28.0 | 5.6 |

# 过桥链系列 Bridge Chain Series





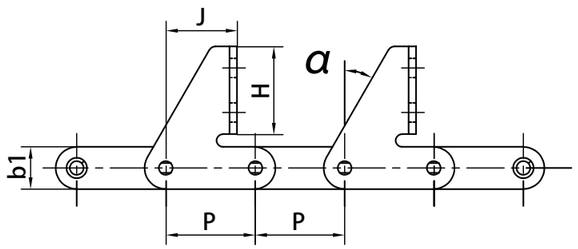


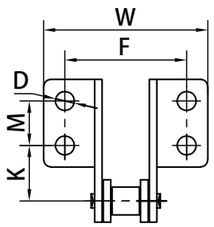


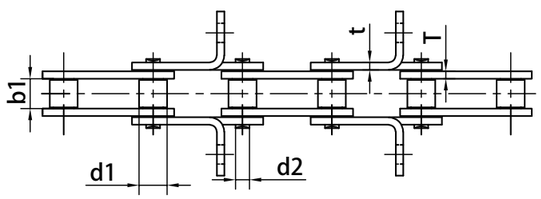


| 征和链号 CHOHO Chain No. | 节距 | 滚子直径 | 销轴直径 | 内节内宽 | 销轴长度 | 链板尺寸 | | | 附板尺寸 | | | | | | | |
|---|---|---|---|---|---|---|---|---|---|---|---|---|---|---|---|---|
| | P | d1 max | d2 max | b1 min | L max | h2 max | T | t | J | H | K | M | F | W | D | α |
| | mm | mm | mm | mm | mm | mm | mm | mm | mm | mm | mm | mm | mm | mm | mm | / |
| C2060A2 | 38.1 | 11.91 | 5.94 | 12.57 | 25.9 | 18.1 | 2.42 | 2.42 | 40.4 | 50.0 | 29.0 | 30.0 | 43.0 | 63.0 | 8.5 | 35.4 |
| C2060HF1 | 38.1 | 11.91 | 5.94 | 12.57 | 29.7 | 18.1 | 3.2 | 3.2 | 30.5 | 37.5 | 23.8 | 19.0 | 52.0 | 70.2 | 8.2 | 30.0 |

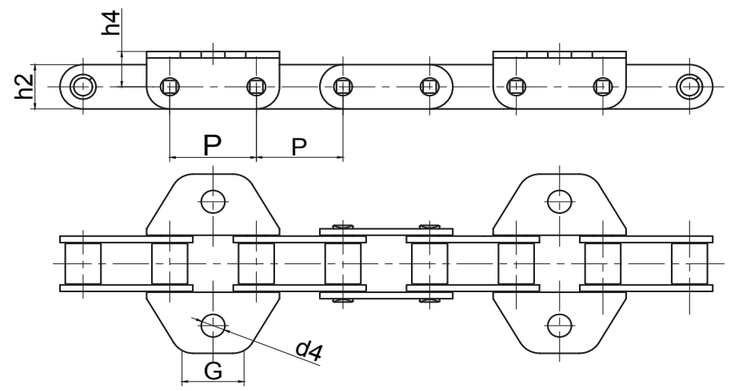


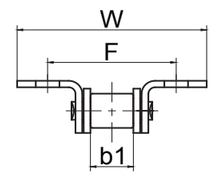


| 征和链号 CHOHO Chain No. | P | h2 | b1 | h4 | F | W | G | d4 |
|---|---|---|---|---|---|---|---|---|
| | mm | mm | min | mm | mm | mm | mm | mm |
| 38.4VBK1 | 38.4 | 20.5 | 19.05 | 14 | 57.0 | 87.0 | 32.0 | 10.5 |
| 38.4VBK2 | 38.4 | 20.5 | 19.05 | 15.8 | 57.4 | 83.0 | 30.0 | 10.5 |
| 38.4VBF3 | 38.4 | 20.5 | 19.05 | 14 | 57.0 | 84.0 | 40.0 | 10.5 |
| 38.4VBF5 | 38.4 | 20.5 | 19.05 | 14 | 57.5 | 84.5 | 40.0 | 10.5 |
| 38.4VBHF3 | 38.4 | 20.5 | 19.05 | 14 | 57.0 | 84.0 | 41.18 | 10.5 |

# 过桥链系列 Bridge Chain Series





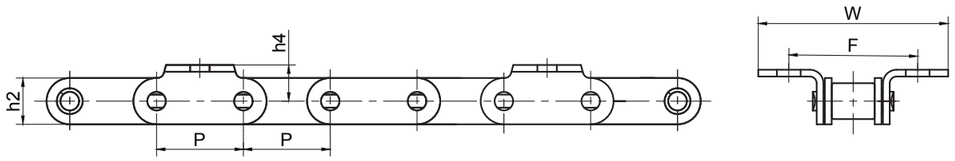


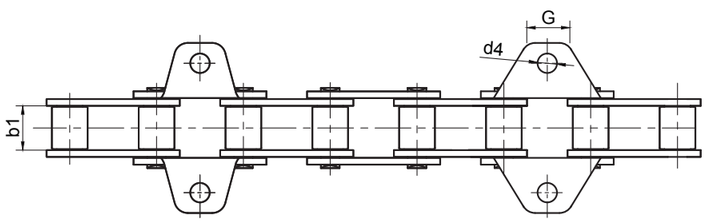


38.4VBF6 38.4VBF8

| 征和链号 CHOHO Chain No. | P | h2 | b1 | h4 | F | W | G | d4 |
|---|---|---|---|---|---|---|---|---|
| | mm | mm | min | mm | mm | mm | mm | mm |
| 38.4VBF6 | 38.4 | 20.5 | 19.05 | 16 | 57.0 | 75.0 | 20.0 | 8.6 |
| 38.4VBF8 | 38.4 | 20.5 | 19.05 | 16 | 57.0 | 75.0 | 20.0 | 8.6 |

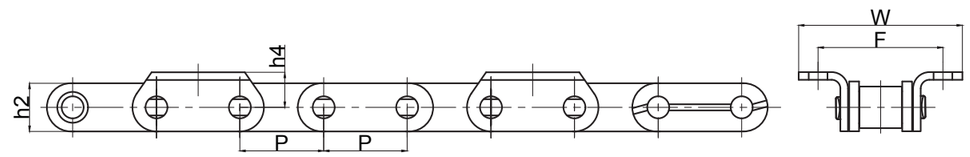


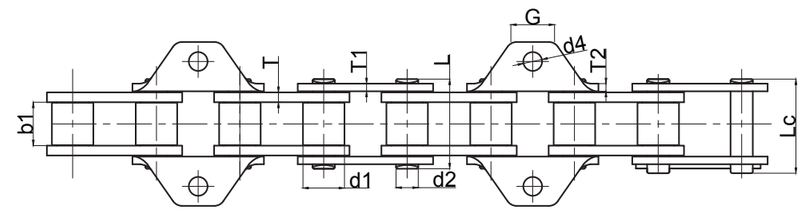


| 征和链号 CHOHO Chain No. | 节距 | 滚子直径 | 销轴直径 | 内节内宽 | 销轴长度 | | 链板尺寸 | | | | 附板尺寸 | | | | | 抗拉强度 | 平均抗拉强度 |
|---|---|---|---|---|---|---|---|---|---|---|---|---|---|---|---|---|---|
| | P | d1 max | d2 max | b1 min | L max | Lc max | h2 max | T max | T1 max | T2 max | F | E | h4 | d3 | W | Q min | $Q_0$ |
| | mm | mm | mm | mm | mm | mm | mm | mm | mm | mm | mm | mm | mm | mm | mm | kN | kN |
| 38.4VBF7 | 38.40 | 19.05 | 10.19 | 19.56 | 40.90 | 44.30 | 22.0 | 4.5 | 3.5 | 3.5 | 16 | 57.0 | 74.8 | 20.0 | 8.6 | 65.00 | 80.0 |

# 过桥链系列 Bridge Chain Series





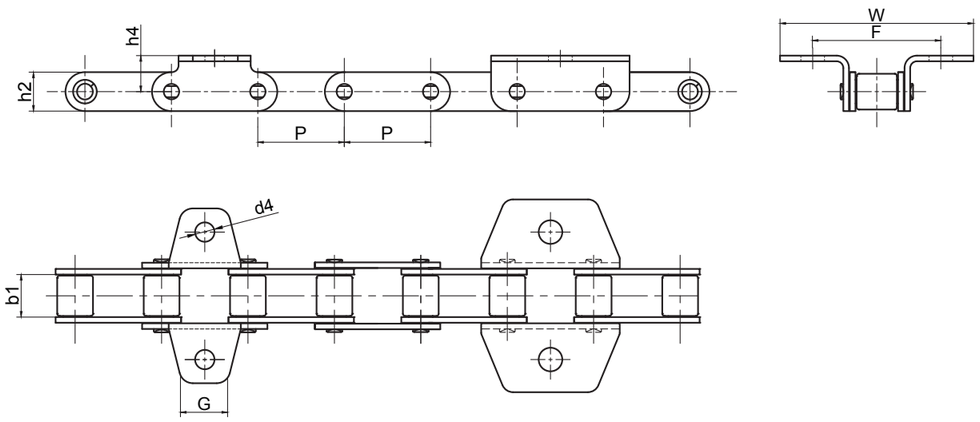


38.4RK1F3 38.4RK1F7

| 征和链号 CHOHO Chain No. | P | h2 | b1 | h4 | F | W | G | d4 |
|---|---|---|---|---|---|---|---|---|
| | mm | mm | min | mm | mm | mm | mm | mm |
| 38.4RK1F3 | 38.4 | 17.3 | 19.05 | 16 | 57.0 | 78.0 | 20.0 | 8.6 |
| 38.4RK1F7 | 38.4 | 17.3 | 19.05 | 16 | 57.0 | 86.0 | 40.0 | 10.5 |

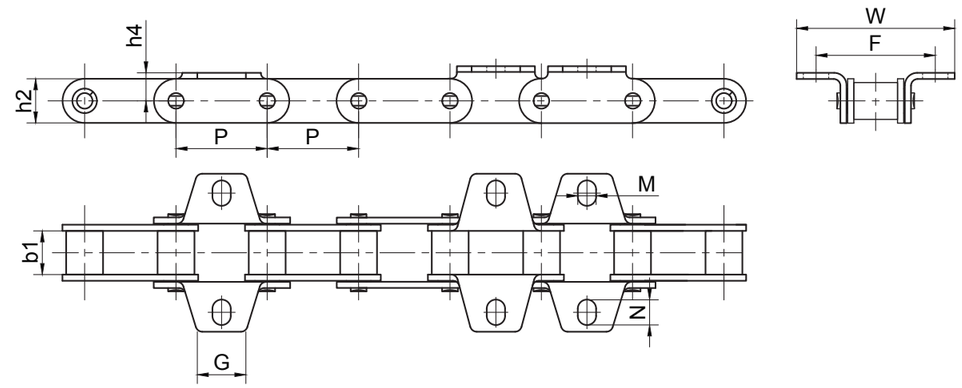


CA550K1F3 CA550K1F2

| 征和链号 CHOHO Chain No. | P | h2 | b1 | h4 | F | W | G | M | N |
|---|---|---|---|---|---|---|---|---|---|
| | mm | mm | min | mm | mm | mm | mm | mm | mm |
| CA550K1F2 | 41.4 | 20.2 | 19.80 | 15.7 | 54.0 | 71.6 | 22.0 | 8.3 | 11.5 |
| CA550K1F3 | 41.4 | 20.2 | 19.80 | 12.7 | 54.0 | 71.6 | 22.0 | 8.3 | 11.5 |
| CA550K1F5 | 41.4 | 20.2 | 19.80 | 12.7 | 56.8 | 76.2 | 22.0 | 8.3 | 10.0 |

# 过桥链系列 Bridge Chain Series





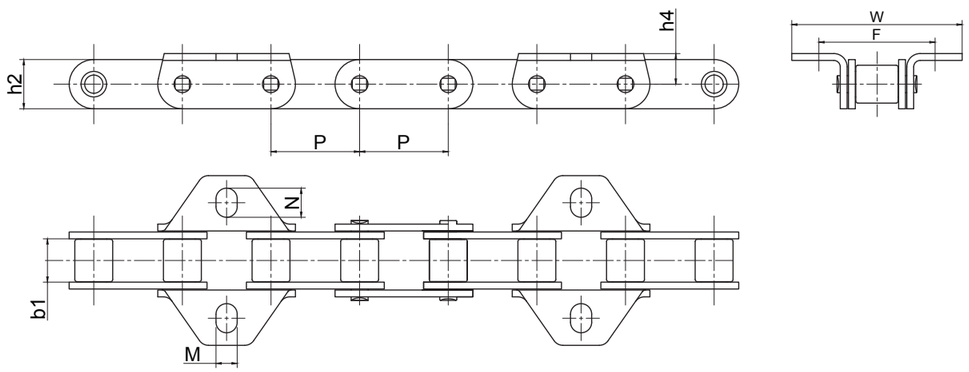


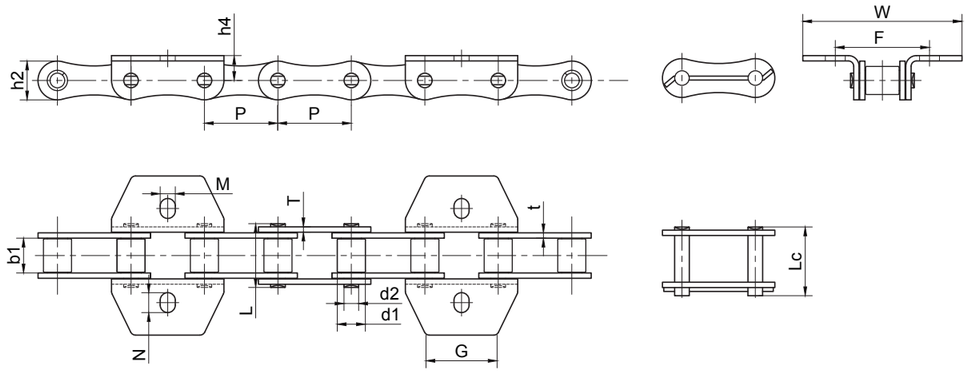


| 征和链号 CHOHO Chain No. | P | h2 | b1 | h4 | F | W | G | M | N |
|---|---|---|---|---|---|---|---|---|---|
| | mm | mm | min | mm | mm | mm | mm | mm | mm |
| CA557F2 | 41.4 | 23.0 | 20.25 | 14.3 | 54.0 | 79.3 | 22.2 | 9.9 | 13.6 |

| 征和链号 CHOHO Chain No. | 节距 | 滚子直径 | 销轴直径 | 内节内宽 | 销轴长度 | | 链板尺寸 | | | 附板尺寸 | | | | | | 抗拉强度 | 平均抗拉强度 |
|---|---|---|---|---|---|---|---|---|---|---|---|---|---|---|---|---|---|
| | P | d1 max | d2 max | b1 min | L max | Ls max | h2 max | T max | t max | h4 | F | W | G | M | N | Q min | $Q_0$ |
| | mm | mm | mm | mm | mm | mm | mm | mm | mm | mm | mm | mm | mm | mm | mm | kN | kN |
| CA642 | 41.40 | 15.88 | 8.28 | 19.05 | 35.90 | 38.70 | 22.0 | 3.0 | 3.0 | / | / | / | / | / | / | 55.00 | 75.0 |
| CA642S103 | 41.40 | 15.88 | 8.28 | 19.05 | 35.90 | 38.70 | 22.0 | 3.0 | 3.0 | 14 | 53.0 | 89.6 | 40.0 | 8.5 | 11.2 | 55.00 | 75.0 |

# 提升链系列 Lifting Chain Series

CHOHO



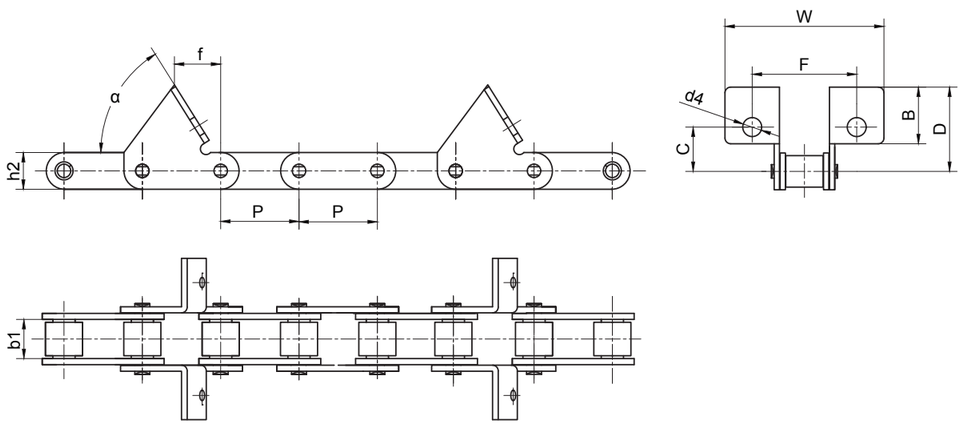


| 征和链号 CHOHO Chain No. | P | h2 | b1 | α | f | B | C | D | F | W | d4 |
|---|---|---|---|---|---|---|---|---|---|---|---|
| | mm | mm | min | / | mm | mm | mm | mm | mm | mm | mm |
| CA550H-F1.4 | 41.4 | 20.2 | 19.8 | 70° | 18.10 | 27.00 | 23.40 | 40.40 | 58.0 | 90.0 | 9.90 |
| CA550H-F1.4(10.4) | 41.4 | 20.2 | 19.8 | 70° | 18.10 | 27.00 | 23.40 | 40.40 | 58.0 | 90.0 | 10.40 |
| CA550H-F1.4V1 | 41.4 | 20.2 | 19.8 | 70° | 18.10 | 27.00 | 23.40 | 40.40 | 58.0 | 90.0 | 8.50 |

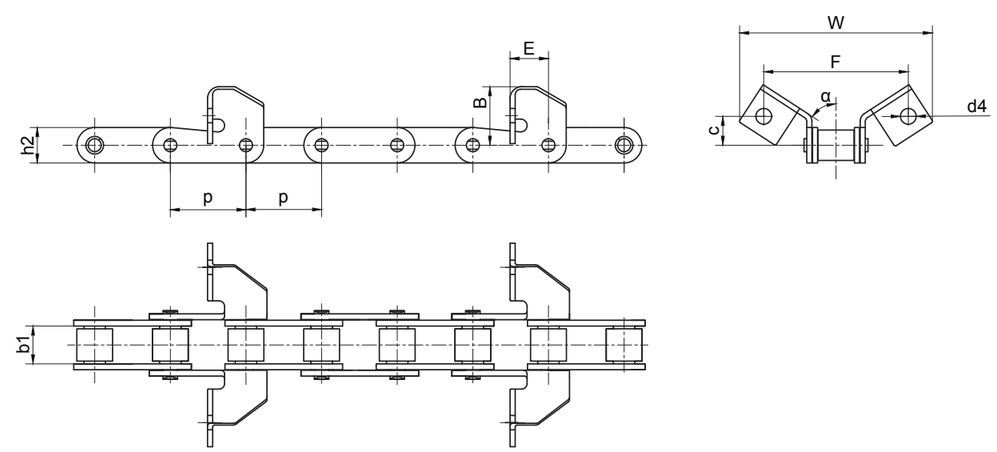


| 征和链号 CHOHO Chain No. | P | h2 | b1 | α | B | C | E | F | W | d4 |
|---|---|---|---|---|---|---|---|---|---|---|
| | mm | mm | mm | / | mm | mm | mm | mm | mm | mm |
| CA550F19 | 41.4 | 20.2 | 19.80 | 56° | 32.0 | 15.9 | 21.0 | 104.5 | 79.4 | 10.3 |
| CA550F19(φ8.33) | 41.4 | 20.2 | 19.80 | 56° | 32.0 | 15.9 | 21.0 | 79.4 | 104.5 | 8.33 |
| CA550HDF5 | 41.4 | 20.2 | 19.05 | 56° | 32.6 | 15.9 | 20.0 | 79.4 | 102.1 | 10.0 |
| CA550R-F19 | 41.4 | 20.2 | 19.05 | 56° | 32.00 | 15.9 | 21.0 | 79.0 | 107.4 | 8.7 |
| CA557-SFD | 41.4 | 23.00 | 20.25 | 30° | 24.3 | 50.10 | 28.60 | 79.4 | 109.80 | 8.5 |

# 提升链系列 Lifting Chain Series





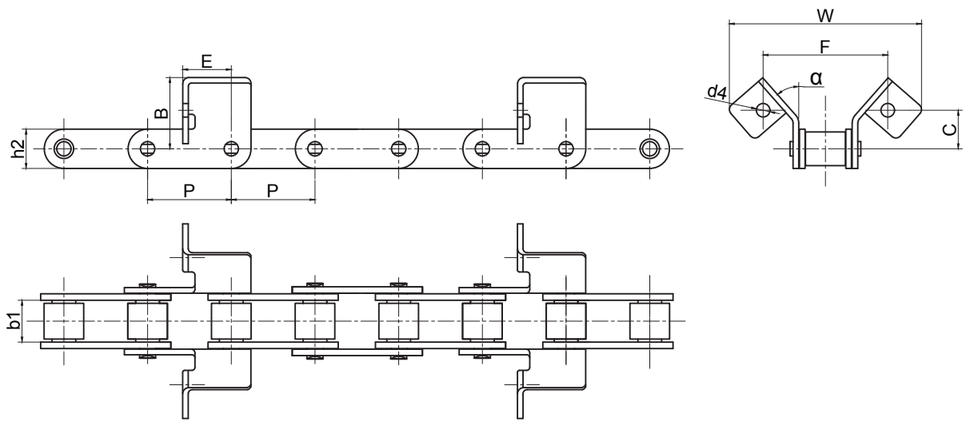


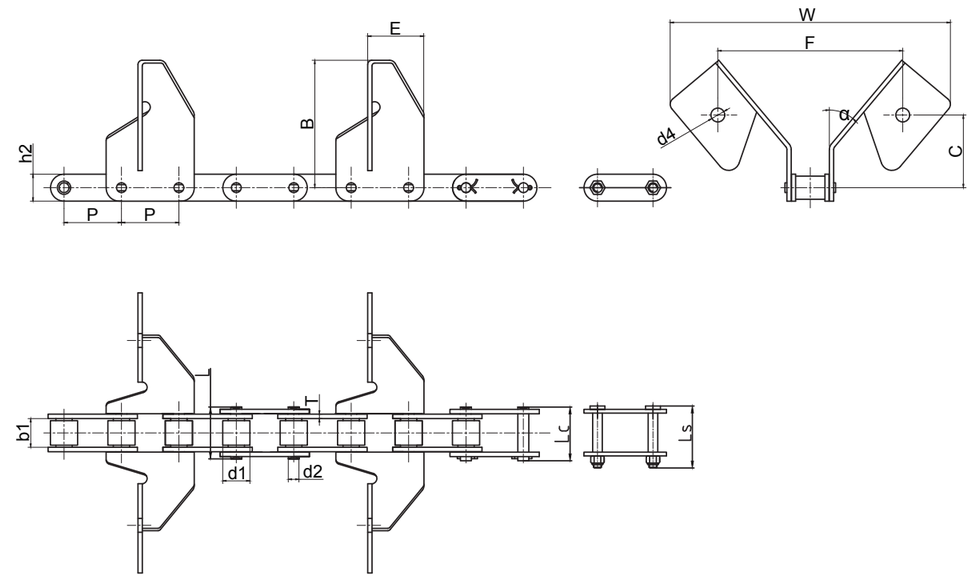


| 征和链号 CHOHO Chain No. | P | h2 | b1 | α | B | C | E | F | W | d4 |
|---|---|---|---|---|---|---|---|---|---|---|
| | mm | mm | mm | / | mm | mm | mm | mm | mm | mm |
| CA550F7 | 41.4 | 20.20 | 19.80 | 90° | 23.16 | 7.94 | 15.875 | 63.5 | 88.1 | 8.33 |
| CA550F15 | 41.4 | 20.20 | 19.80 | 41° | 35.26 | 19.05 | 24.0 | 62.0 | 95.25 | 6.73 |
| CA550F17 | 41.4 | 20.20 | 19.80 | 60° | 41.00 | 20.50 | 23.5 | 114.3 | 142.6 | 10.2 |
| CA550VF13 | 41.4 | 20.2 | 19.05 | 65° | 50.0 | 28.6 | 21.0 | 79.25 | 106.5 | 8.5 |
| CA550R-F2.4 | 41.4 | 20.2 | 19.05 | 35° | 59.50 | 28.5 | 24.5 | 79.4 | 135.5 | 8.74 |
| CA550R-F3.4 | 41.4 | 20.2 | 19.05 | 35° | 50.00 | 28.5 | 20.2 | 79.4 | 122 | 8.74 |
| CA550R-F17 | 41.4 | 20.20 | 19.05 | 60° | 40.89 | 20.57 | 23.68 | 114.3 | 143.7 | 9.91 |

| 征和链号 CHOHO Chain No. | 节距 | 滚子直径 | 销轴直径 | 内节内宽 | 销轴长度 | | | 链板尺寸 | | 附板尺寸 | | | | | | | 抗拉强度 |
|---|---|---|---|---|---|---|---|---|---|---|---|---|---|---|---|---|---|
| | P | d1 max | d2 max | b1 min | L max | Lc max | Ls max | h2 max | T | α | B | C | E | F | W | d4 | Q min |
| | mm | mm | mm | mm | mm | mm | mm | mm | mm | / | mm | mm | mm | mm | mm | mm | kN |
| CA550HDF15 | 41.4 | 16.8 | 8.02 | 19.05 | 38 | 41 | 47.6 | 20.2 | 3.1 | 40° | 91.9 | 52.4 | 40.55 | 133.3 | 202.0 | 10.0 | 44 |
| CA550HDF15(φ8.5) | 41.4 | 16.8 | 8.02 | 19.05 | 38 | 41 | 47.6 | 20.2 | 3.1 | 40° | 91.9 | 52.4 | 40.55 | 133.3 | 202.0 | 8.5 | 44 |
| CA550HDF18 | 41.4 | 16.66 | 8.28 | 19.2-19.5 | 35.65 | / | 46.4 | 20.2 | 3.1 | 40° | 91.9 | 51.76 | 40.55 | 130.0 | 201.0 | 8.5 | 55 |
| CA550HDF15V1 | 41.4 | 16.8 | 8.02 | 19.05 | 38 | 41 | 47.6 | 20.2 | 3.1 | 40° | 91.9 | 52.4 | 40.55 | 133.3 | 202.0 | 10.5 | 44 |
| CA550HDF15V1 -B20 | 41.4 | 16.8 | 8.02 | 20.00 | 38 | 41 | 47.6 | 20.2 | 3.1 | 40° | 91.9 | 52.4 | 40.55 | 133.3 | 202.0 | 10.5 | 44 |

# 提升链系列 Lifting Chain Series

CHOHO



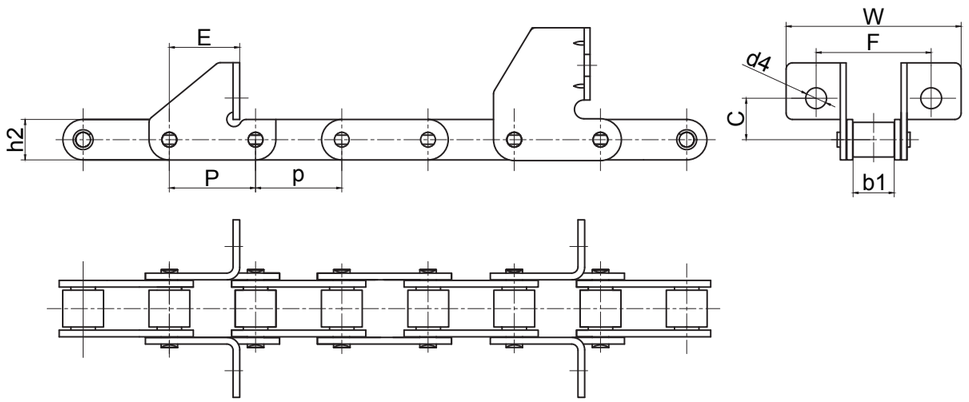


CA550HSD
CA550SDF6

CA550F4S

| 征和链号 CHOHO Chain No. | P | h2 | b1 | C | E | F | W | d4 |
|---|---|---|---|---|---|---|---|---|
| | mm | mm | mm | mm | mm | mm | mm | mm |
| CA550HSD | 41.4 | 20.2 | 19.8 | 20.0 | 33.3 | 58.0 | 90.0 | 6.5 |
| CA550HSDV1 | 41.4 | 20.2 | 19.8 | 20.0 | 33.3 | 62.0 | 90.0 | 6.5 |
| CA550HSD(φ8.4) | 41.4 | 20.2 | 19.8 | 20.0 | 33.3 | 58.0 | 90.0 | 8.4 |
| CA550SDF6 | 41.4 | 20.2 | 19.8 | 20.5 | 33.0 | 58.0 | 85.0 | 6.5 |
| CA550F4S | 41.4 | 20.2 | 19.8 | 35.7 | 36.3 | 54.0 | 75.4 | 10.5 |



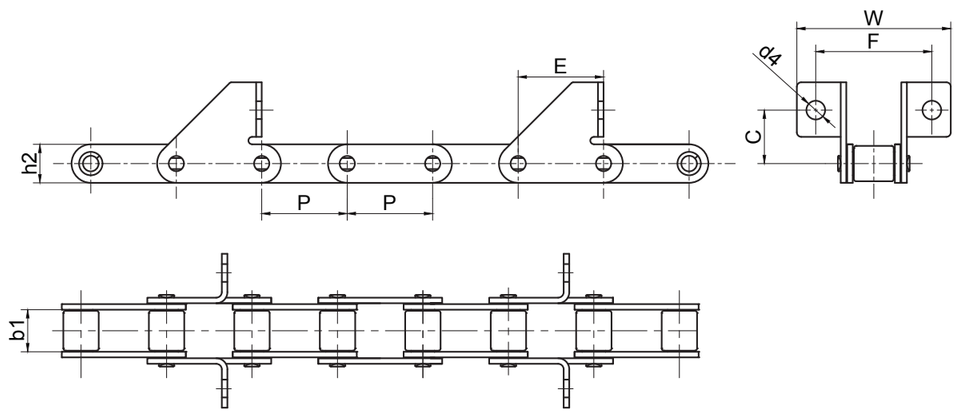


| 征和链号 CHOHO Chain No. | P | h2 | b1 | E | F | W | C | d4 |
|---|---|---|---|---|---|---|---|---|
| | mm | mm | min | mm | mm | mm | mm | mm |
| 38.4R-SD | 38.4 | 17.3 | 19.05 | 27.3 | 52.0 | 69.0 | 24.0 | 8.4 |
| 38.4R-SDF | 38.4 | 17.3 | 19.05 | 38.4 | 52.0 | 72.0 | 24.0 | 8.4 |
| 38.4RH-SD | 38.4 | 17.3 | 19.05 | 38.4 | 52.0 | 71.0 | 24.0 | 8.4 |
| 38.4VBF1 | 38.4 | 20.5 | 19.05 | 38.4 | 52.0 | 71.0 | 24.5 | 8.4 |

# 拨禾链系列 Potting Chain Series





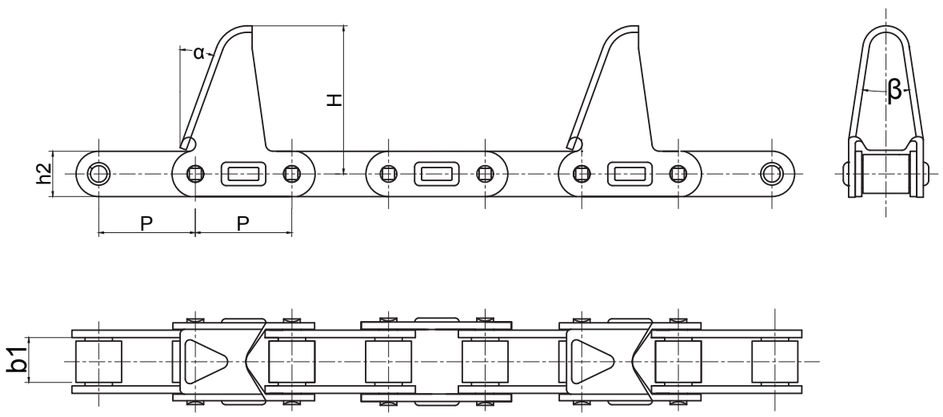


| 征和链号 CHOHO Chain No. | P | h2 | b1 | α | β | H |
|---|---|---|---|---|---|---|
| | mm | mm | mm | / | / | mm |
| CA550C11E | 41.4 | 20.2 | 19.8 | 20° | 17° | 63.5 |
| CA550C13E | 41.4 | 20.2 | 19.8 | 15° | 13° | 92.0 |



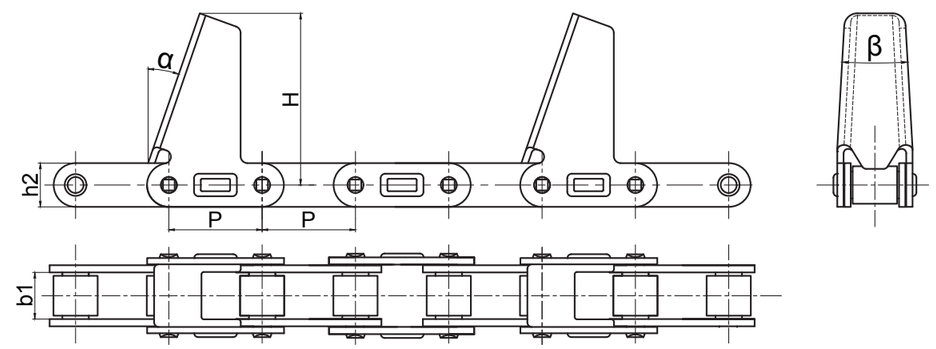


| 征和链号 CHOHO Chain No. | P | h2 | b1 | α | β | H |
|---|---|---|---|---|---|---|
| | mm | mm | mm | / | / | mm |
| CA550C17E | 41.4 | 20.2 | 19.8 | 20° | 5° | 76.2 |

# 拨禾链系列 Potting Chain Series





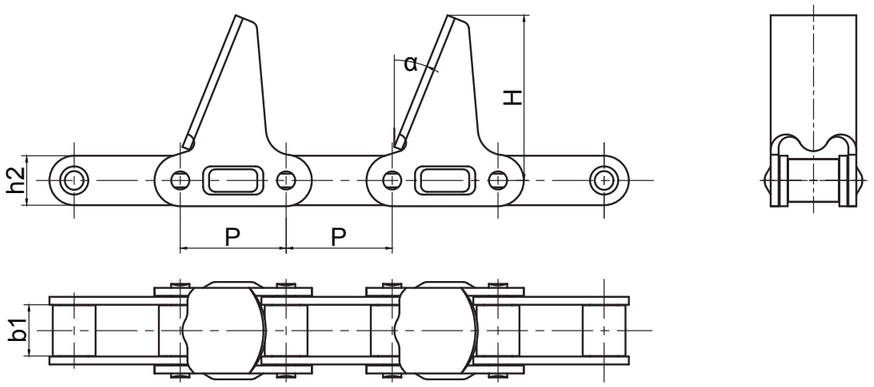




| 征和链号 CHOHO Chain No. | P | h2 | b1 | α | H |
|---|---|---|---|---|---|
| | mm | mm | mm | / | mm |
| CA550HC5E | 41.4 | 20.2 | 19.8 | 22° | 65.0 |

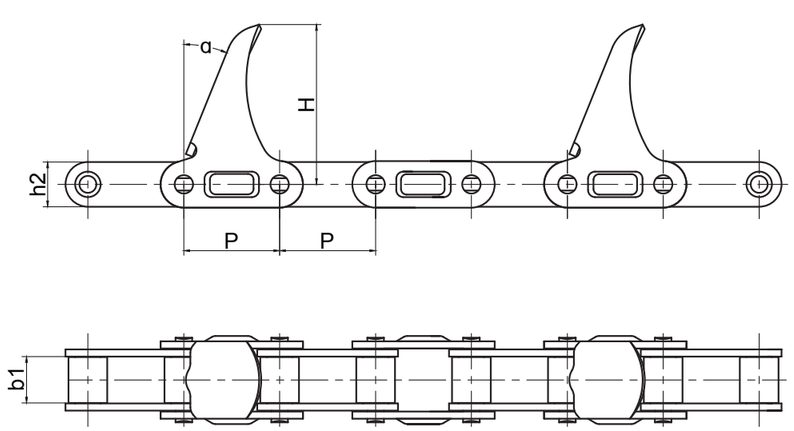


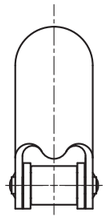

| 征和链号 CHOHO Chain No. | P | h2 | b1 | α | H |
|---|---|---|---|---|---|
| | mm | mm | mm | / | mm |
| CA550HC6E | 41.4 | 20.2 | 19.8 | 22° | 69.0 |
| CA550HF1-Z1 | 41.4 | 20.2 | 19.8 | 20° | 69.0 |
| CA550C6E | 41.4 | 20.2 | 19.8 | 22° | 70.0 |
| C2060HC6E | 38.1 | 18.1 | 12.57 | 22.5° | 63.5 |

# 拨禾链系列 Potting Chain Series





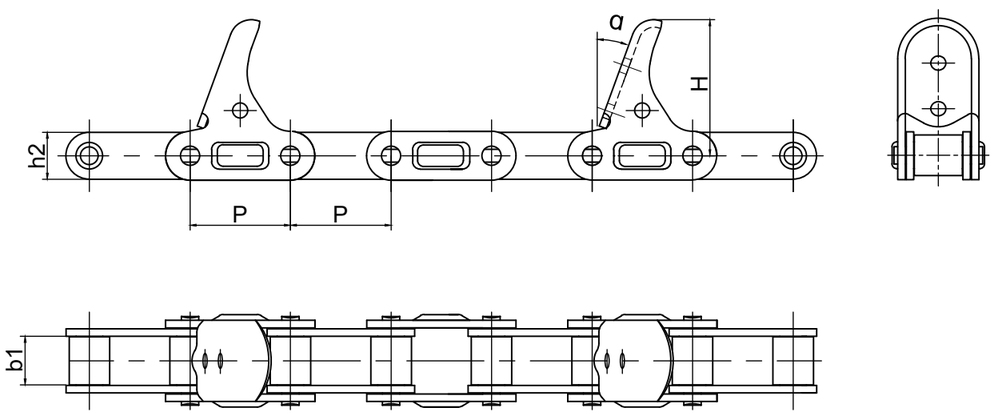


| 征和链号 CHOHO Chain No. | P | h2 | b1 | α | H |
|---|---|---|---|---|---|
| | mm | mm | mm | / | mm |
| CA550HC4E-HDS | 41.4 | 20.2 | 19.8 | 20° | 56.0 |

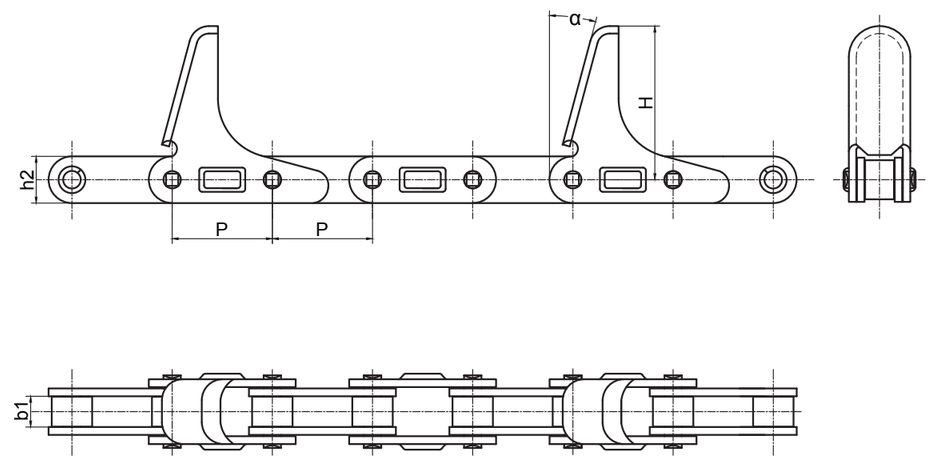


| 征和链号 CHOHO Chain No. | P | h2 | b1 | α | H |
|---|---|---|---|---|---|
| | mm | mm | mm | / | mm |
| CA555C6E(66) | 41.4 | 19.30 | 12.70 | 15° | 66 |
| CA555C6E(63.5) | 41.4 | 19.30 | 12.70 | 15° | 64 |

# 拨禾链系列 Potting Chain Series





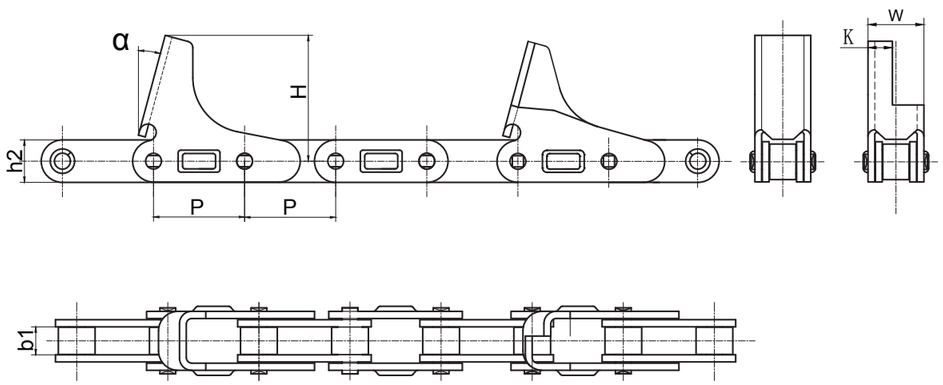


| 征和链号 CHOHO Chain No. | P | h2 | b1 | α | H | K | W |
|---|---|---|---|---|---|---|---|
| | mm | mm | mm | / | mm | mm | mm |
| CA555C2E | 41.4 | 19.3 | 12.7 | 15° | 54 | / | 26.9 |
| CA555C5E | 41.4 | 19.3 | 12.7 | 15° | 57.2 | / | 26.9 |
| CA555C5EF1 | 41.4 | 19.3 | 12.7 | 15° | 54.5 | 11.5 | 26.9 |

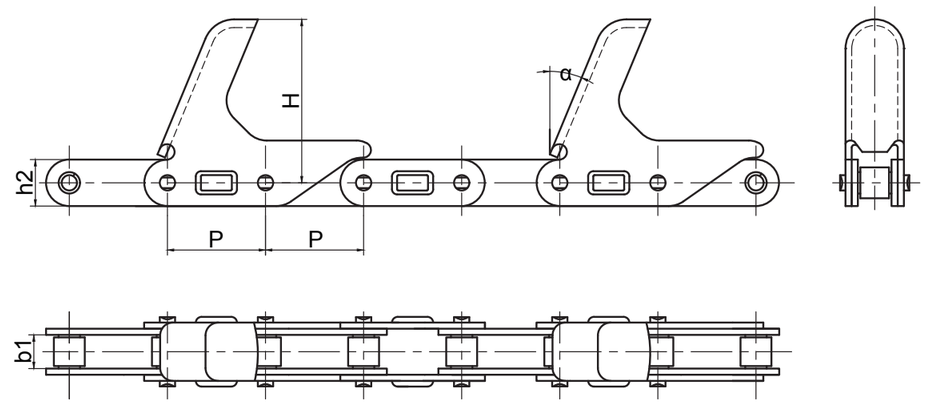


| 征和链号 CHOHO Chain No. | P | h2 | b1 | α | H |
|---|---|---|---|---|---|
| | mm | mm | mm | / | mm |
| C2060HC6EF4 | 38.1 | 18.10 | 12.57 | 22.5° | 63.5 |

# 拨禾链系列 Potting Chain Series





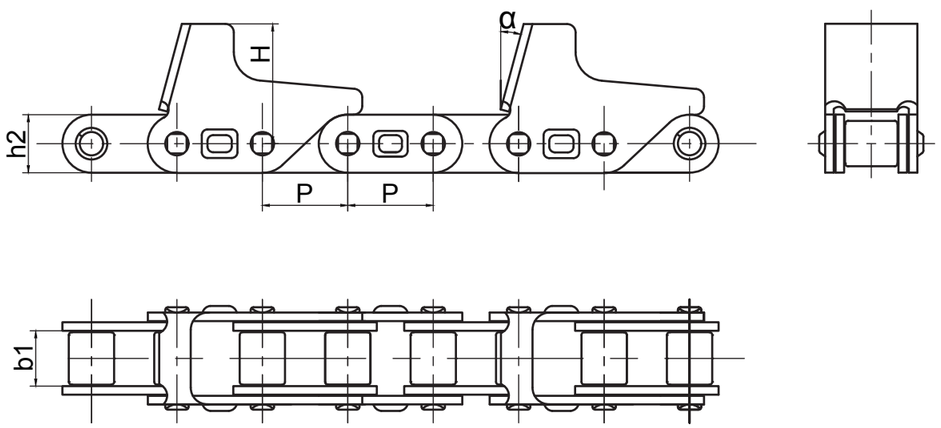


| 征和链号 CHOHO Chain No. | P | h2 | b1 | α | H |
|---|---|---|---|---|---|
| | mm | mm | mm | / | mm |
| CA627-M5A | 30.0 | 20.5 | 19.05 | 15° | 42.0 |

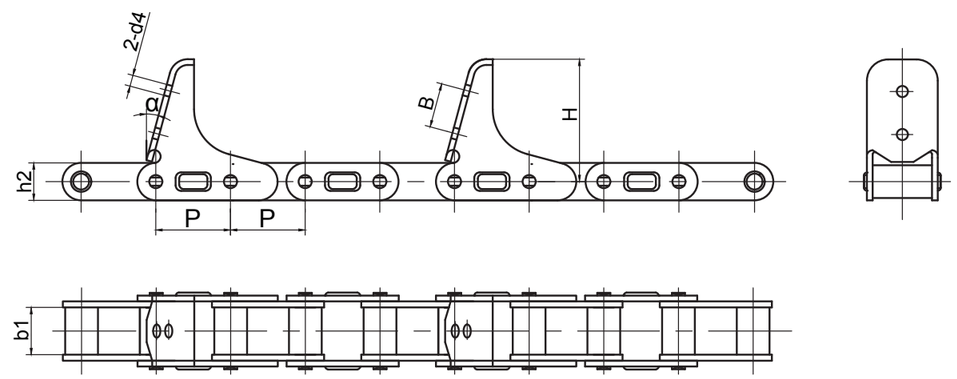


| 征和链号 CHOHO Chain No. | P | h2 | b1 | α | H | B | d4 |
|---|---|---|---|---|---|---|---|
| | mm | mm | mm | / | mm | mm | mm |
| CA620-P32.5 | 32.50 | 20.2 | 24.51 | 15° | 66.0 | 24.0 | 6 |
| CA620MC6E | 40.25 | 20.2 | 24.51 | 15° | 66.0 | 24.0 | 6 |
| CA620C6E-P42.01 | 42.01 | 20.2 | 24.51 | 15° | 66.0 | 24.0 | 6 |

# 拨禾链系列 Potting Chain Series





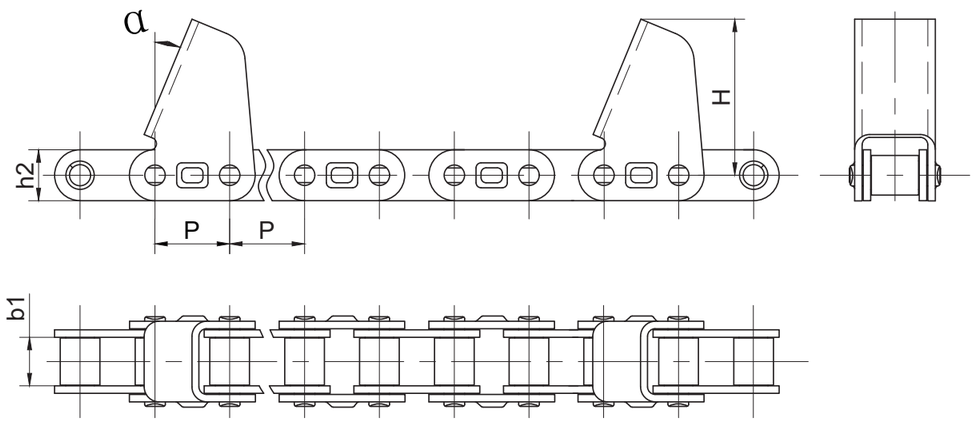


| 征和链号 CHOHO Chain No. | P | h2 | b1 | α | H |
|---|---|---|---|---|---|
| | mm | mm | mm | / | mm |
| CA627-CPEF2 | 30.0 | 20.5 | 19.05 | 22.5° | 62.5 |

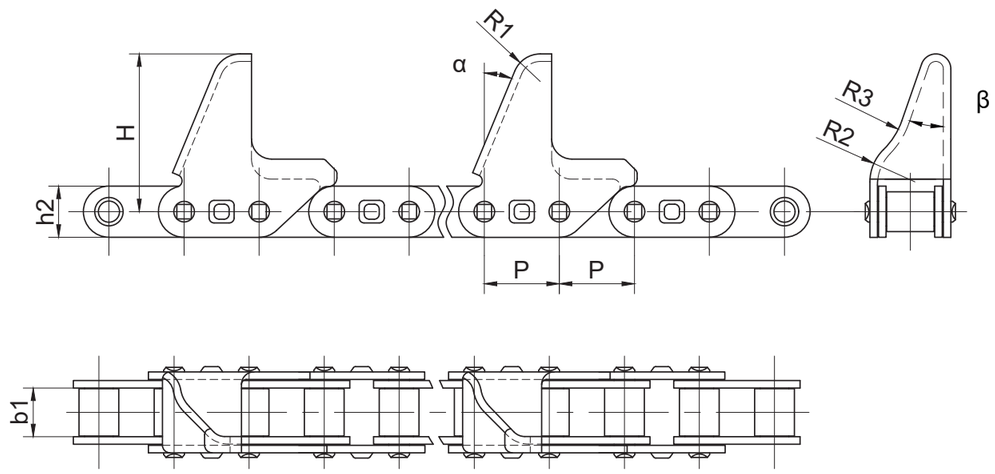


| 征和链号 CHOHO Chain No. | P | h2 | b1 | α | β | H | R1 | R2 | R3 |
|---|---|---|---|---|---|---|---|---|---|
| | mm | mm | mm | / | / | mm | mm | mm | mm |
| CA627-CPEF3 | 30.00 | 20.5 | 19.05 | 22.5° | 19.2° | 63.0 | 11.0 | 18 | 30.0 |

# 拨禾链系列 Potting Chain Series





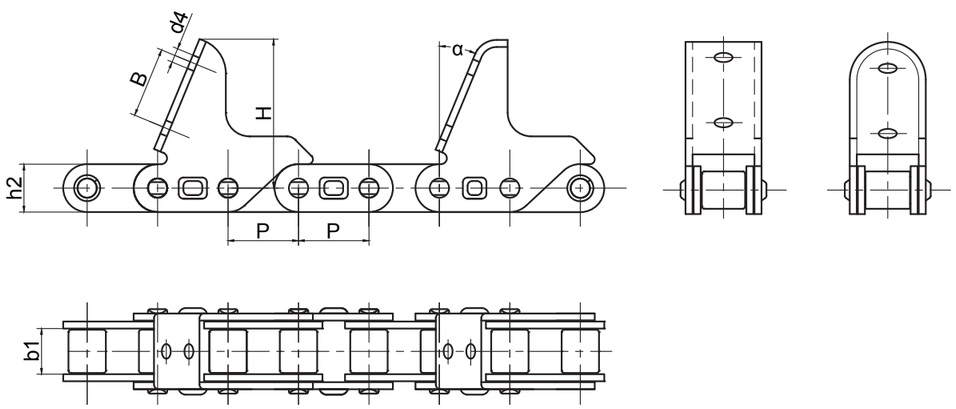


CA627-CPEF11

CA627-CPEF12
CA627-CPEF13

| 征和链号 CHOHO Chain No. | P | h2 | b1 | α | H | B | d4 |
|---|---|---|---|---|---|---|---|
| | mm | mm | mm | / | mm | mm | mm |
| CA627-CPEF11 | 30.0 | 20.5 | 19.05 | 22.5° | 63.0 | 30.0 | 6.5 |
| CA627-CPEF12 | 30.0 | 20.5 | 19.05 | 22.5° | 63.0 | 30.0 | 6.5 |
| CA627-CPEF13 | 30.0 | 20.5 | 19.05 | 15° | 63.0 | 25.5 | 6.5 |

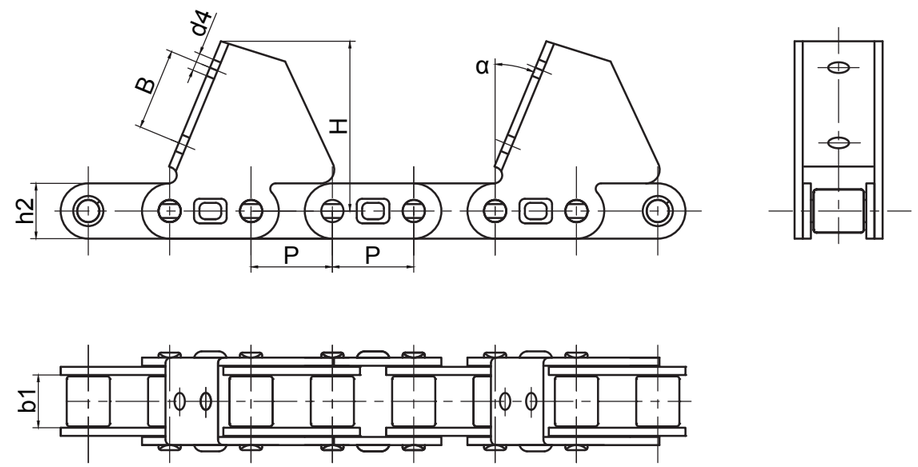


| 征和链号 CHOHO Chain No. | P | h2 | b1 | α | H | B | d4 |
|---|---|---|---|---|---|---|---|
| | mm | mm | mm | / | mm | mm | mm |
| CA627-TM90E | 30.0 | 20.5 | 19.05 | 22.5° | 62.5 | 30.0 | 6.5 |

# 拨禾链系列 Potting Chain Series





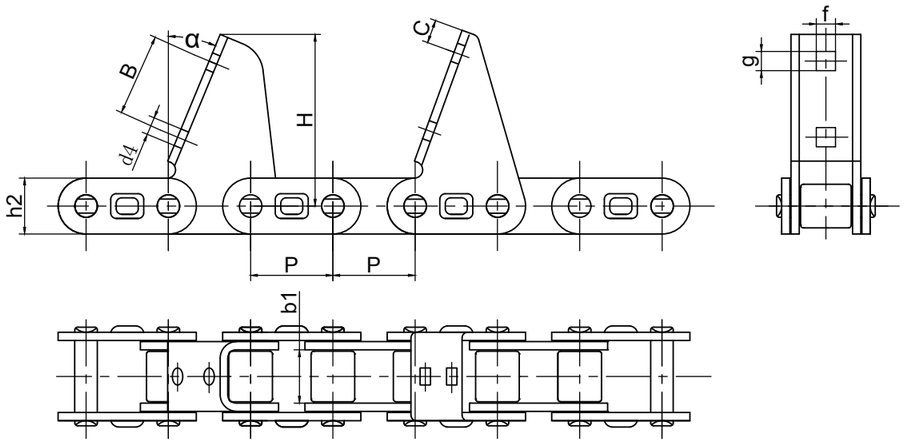


CA627-CPEF14 CA627-CPEF16

| 征和链号 CHOHO Chain No. | P | h2 | b1 | α | H | B | d4 | C | f | g |
|---|---|---|---|---|---|---|---|---|---|---|
| | mm | mm | mm | / | mm | mm | mm | mm | mm | mm |
| CA627-CPEF14 | 30.0 | 20.5 | 19.05 | 22.5° | 62.5 | 30.0 | 6.5 | / | / | / |
| CA627-CPEF16 | 30.0 | 20.5 | 19.05 | 20° | 64.0 | 30.0 | / | 8.5 | 7 | 7 |

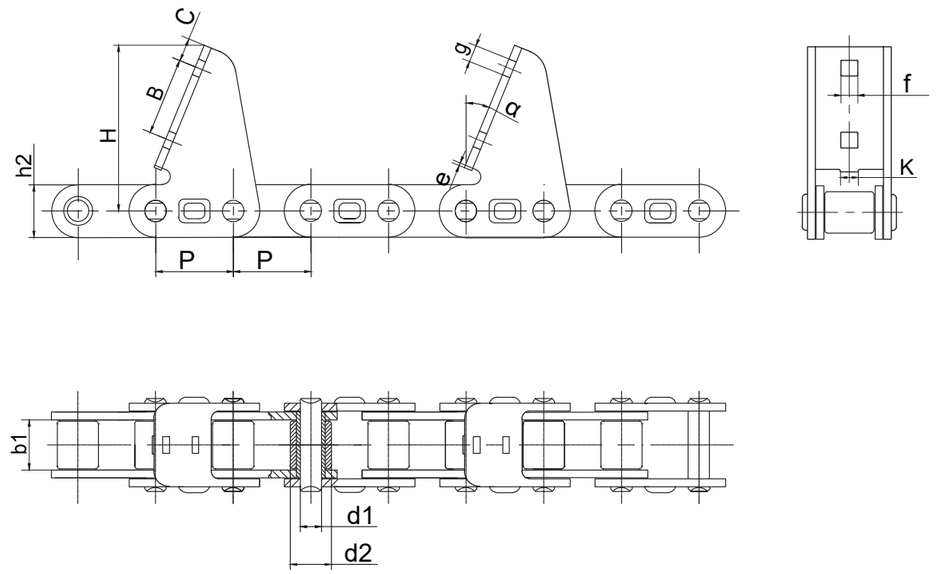


| 征和链号 CHOHO Chain No. | P | h2 | b1 | α | H | B | d4 | C | f | g | K | e | g |
|---|---|---|---|---|---|---|---|---|---|---|---|---|---|
| | mm | mm | mm | / | mm | mm | mm | mm | mm | mm | mm | mm | mm |
| CA627-M20 | 30.0 | 20.5 | 19.05 | 22.3° | 64.0 | 30.0 | 6.5 | 9 | 6.5 | 6.5 | 7.5 | 1 | / |

# 拨禾链系列 Potting Chain Series





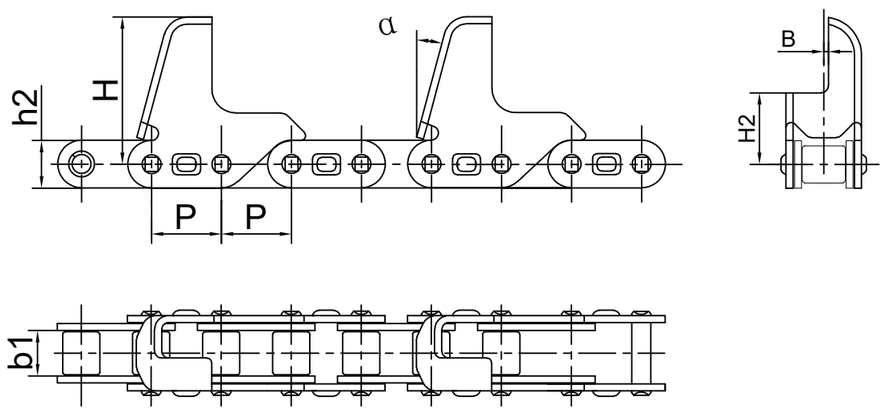


| 征和链号 CHOHO Chain No. | P | h2 | b1 | α | H | B | d4 | B | H2 |
|---|---|---|---|---|---|---|---|---|---|
| | mm | mm | mm | / | mm | mm | mm | mm | mm |
| CA627-M40Y1 | 30.0 | 20.5 | 19.05 | 15 | 63.0 | / | / | 2 | 30.6 |



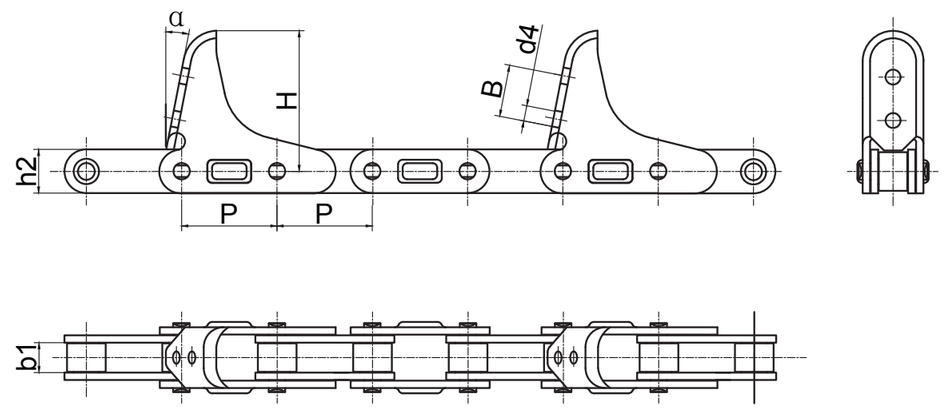


| 征和链号 CHOHO Chain No. | P | h2 | b1 | α | H | B | d4 |
|---|---|---|---|---|---|---|---|
| | mm | mm | mm | / | mm | mm | mm |
| CA555C3E | 41.4 | 19.3 | 12.70 | 10° | 62.5 | 30.0 | 6.5 |
| CA555C6EJK(66) | 41.4 | 19.3 | 12.70 | 15° | 66.0 | 25.4 | 7.3 |
| CA555C6EJK(63.5) | 41.4 | 19.3 | 12.70 | 15° | 63.5 | 25.4 | 7.1 |

# 拨禾链系列 Potting Chain Series



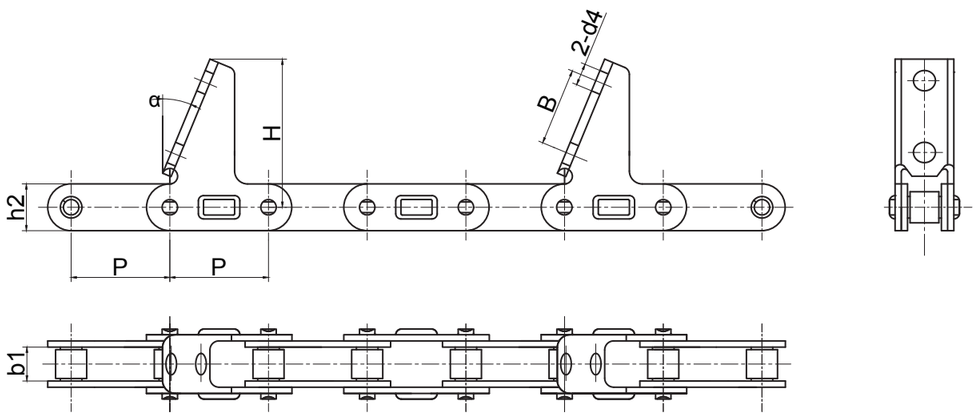


| 征和链号 CHOHO Chain No. | P | h2 | b1 | α | H | B | d4 |
|---|---|---|---|---|---|---|---|
| | mm | mm | mm | / | mm | mm | mm |
| C2060H-7AUE | 38.1 | 18.1 | 12.57 | 22.5° | 57.2 | 30.0 | 8.5 |
| C2060HC5E | 38.1 | 18.1 | 12.57 | 22.5° | 57.2 | 30.0 | / |



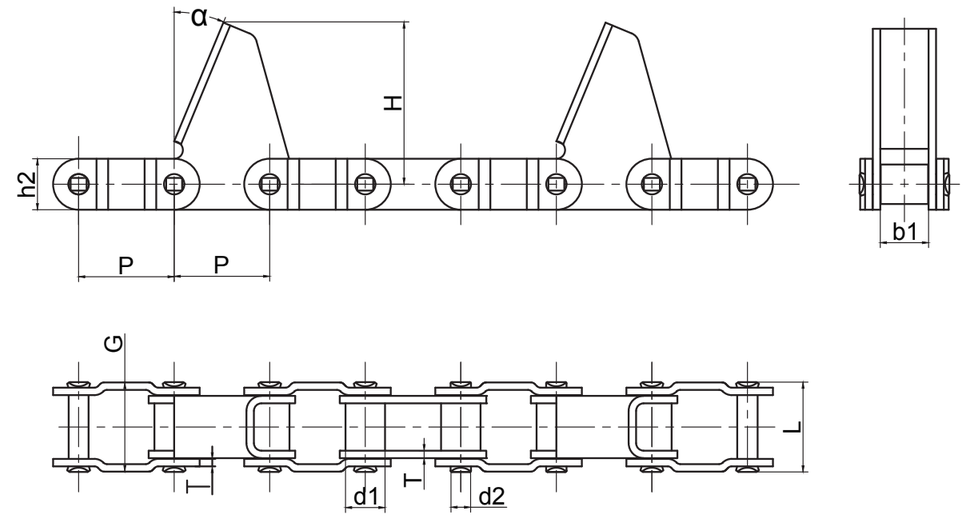


| 征和链号 CHOHO Chain No. | 节距 | 滚子直径 | 销轴直径 | 内节内宽 | 销轴长度 | / | 链板尺寸 | | 附板尺寸 | | 抗拉强度 | 平均抗拉强度 |
|---|---|---|---|---|---|---|---|---|---|---|---|---|
| | P | d1 max | d2 max | b1 min | L max | G | h2 max | T | α | H | Q min | $Q_0$ |
| | mm | mm | mm | mm | mm | mm | mm | mm | / | mm | kN | kN |
| 38.4VBF12 | 38.4 | 15.88 | 8.28 | 19.05 | 35.9 | 37.0 | 20.5 | 3.0 | 22.5° | 62.5 | 50 | 62 |

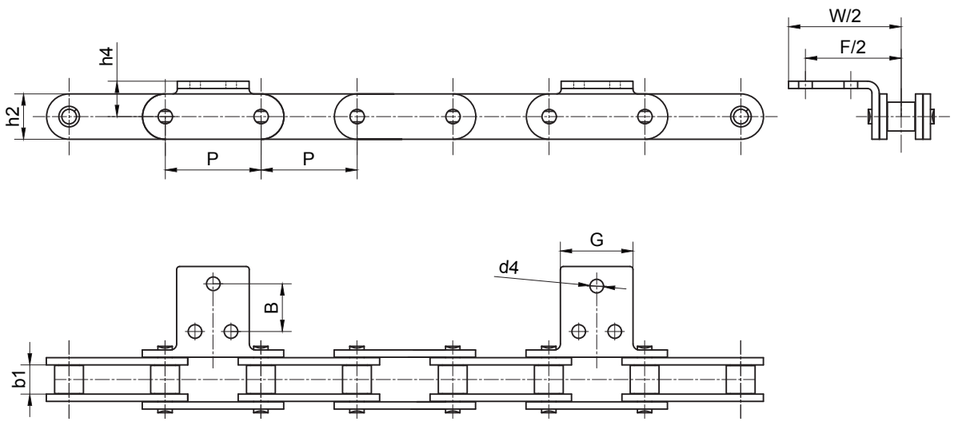


| 征和链号 CHOHO Chain No. | P | h2 | b1 | h4 | F/2 | W/2 | G | d4 | B |
|---|---|---|---|---|---|---|---|---|---|
| | mm | mm | min | mm | mm | mm | mm | mm | mm |
| C2100H-K3 | 63.5 | 30.0 | 18.90 | 23.4 | 63.3 | 74.5 | 48.0 | 9.0 | 30.0 |

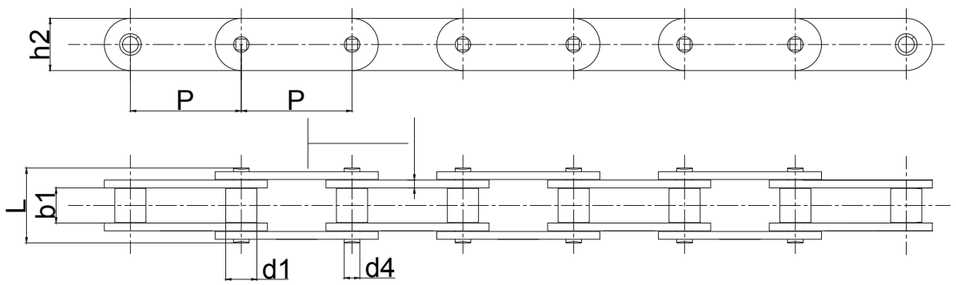


| 征和链号 CHOHO Chain No. | P | h2 | b1 | d1 | d2 | T | L |
|---|---|---|---|---|---|---|---|
| | mm | mm | min | mm | mm | mm | mm |
| C2120H | 76.20 | 36.10 | 25.40 | 22.23 | 11.10 | 5.60 | 54.20 |
| C2160H | 101.60 | 47.80 | 31.55 | 28.55 | 14.29 | 7.20 | 68.60 |
| C2080H | 50.80 | 24.00 | 15.74 | 15.87 | 7.92 | 4.00 | 36.50 |

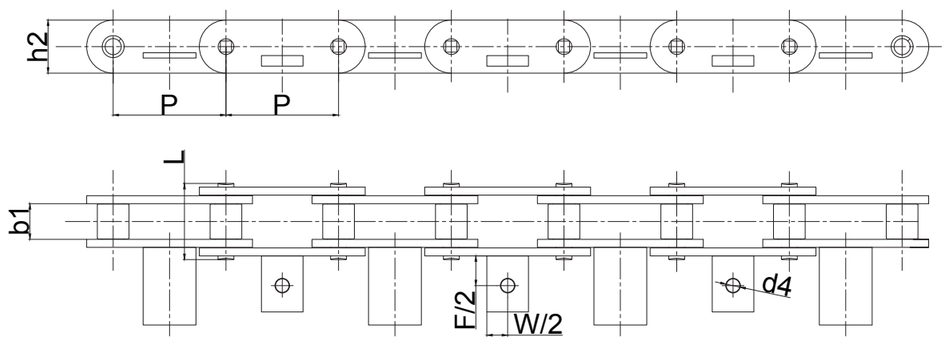


| 征和链号 CHOHO Chain No. | P | h2 | b1 min | F/2 | W/2 | d4 | L |
|---|---|---|---|---|---|---|---|
| | mm | mm | mm | mm | mm | mm | mm |
| C2160H-CW | 101.60 | 47.80 | 31.55 | 26.78 | 18.75 | 12.70 | 68.60 |

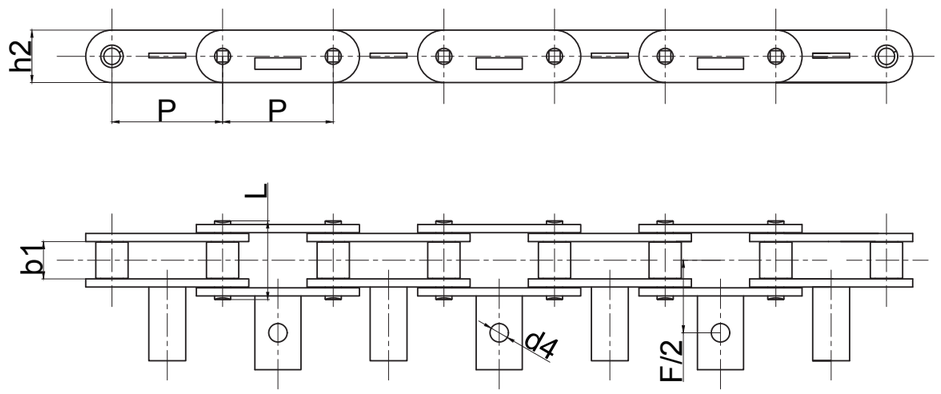


| 征和链号 CHOHO Chain No. | P | h2 | b1 | F/2 | d4 | L |
|---|---|---|---|---|---|---|
| | mm | mm | min | mm | mm | mm |
| C2120H-CW | 76.20 | 36.10 | 25.40 | 50.00 | 12.70 | 54.20 |

# 其他系列 Other Series



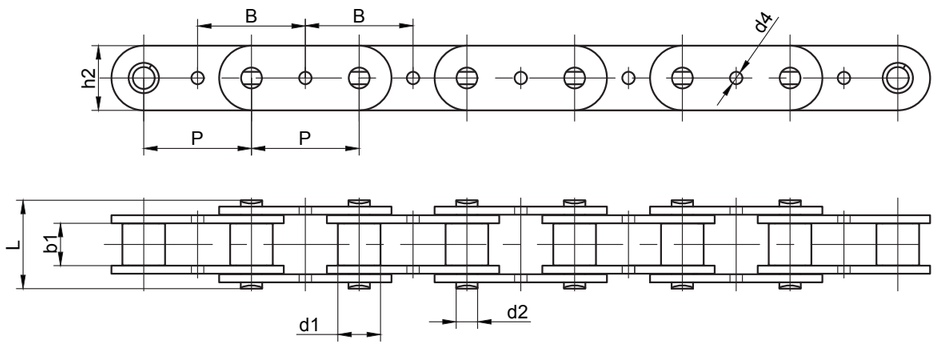


| 征和链号 CHOHO Chain No. | P | h2 | b1 | d1 | d2 | d4 | B | L |
|---|---|---|---|---|---|---|---|---|
| | mm | mm | min | mm | mm | mm | mm | mm |
| P20 | 20.00 | 12.00 | 7.85 | 7.92 | 3.98 | 2.30 | 20.00 | 16.40 |

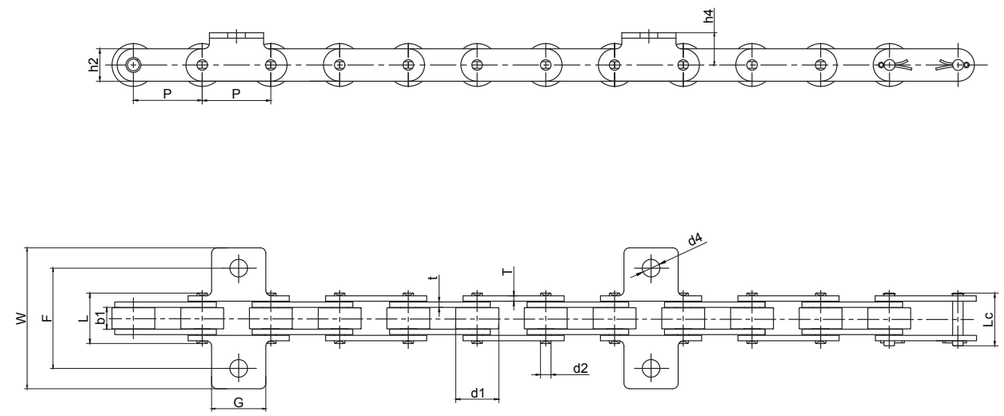


| 征和链号 CHOHO Chain No. | 节距 | 滚子直径 | 销轴直径 | 内节内宽 | 销轴长度 | | | 链板尺寸 | | | 附板尺寸 | | | | | 抗拉强度 |
|---|---|---|---|---|---|---|---|---|---|---|---|---|---|---|---|---|
| | P | d1 max | d2 max | b1 min | L max | Lc max | Ls max | h2 max | T | t | h4 | G | F | W | d4 | Q min |
| | mm | mm | mm | mm | mm | mm | mm | mm | mm | mm | mm | mm | mm | mm | mm | kN |
| C2042HK1 | 25.4 | 15.88 | 3.96 | 7.85 | 18.4 | 20.4 | / | 12.0 | 2.0 | 2.0 | 11.9 | 20 | 37.0 | 52.00 | 6.5 | 13.9 |

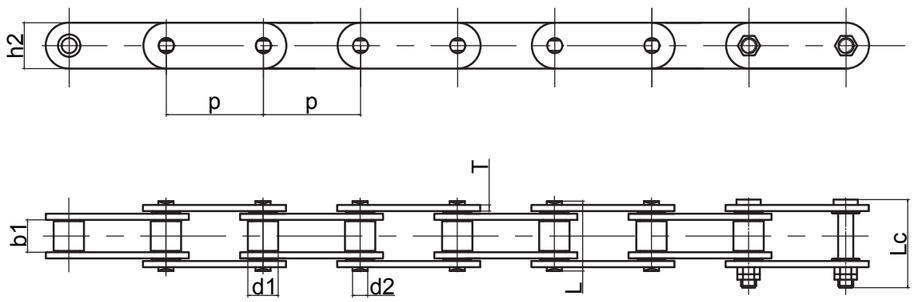


| 征和链号 CHOHO Chain No. | 节距 | 滚子直径 | 内节内宽 | 销轴直径 | 销轴长度 | | 链板 尺寸 | | 抗拉强度 | 平均抗拉强度 | 每米长重 |
|---|---|---|---|---|---|---|---|---|---|---|---|
| | P | d1 max | b1 min | d2 max | L max | Lc max | h2 max | T max | Q min | $Q_0$ | q |
| | mm | mm | mm | mm | mm | mm | mm | mm | kN | kN | kg/m |
| C2060RO | 38.1 | 11.91 | 12.57 | 5.94 | 28.3 | 38.3 | 18.1 | 2.42 | 31.3 | 42.0 | 1.24 |
| C2060HRO | 38.1 | 11.91 | 12.57 | 5.94 | 31.7 | 40.6 | 18.1 | 3.20 | 40.0 | 48.0 | 1.57 |
| C2060RO-N | 38.1 | 11.91 | 12.57 | 5.94 | 28.3 | 38.3 | 18.1 | 2.42 | 31.3 | 42.0 | 1.24 |

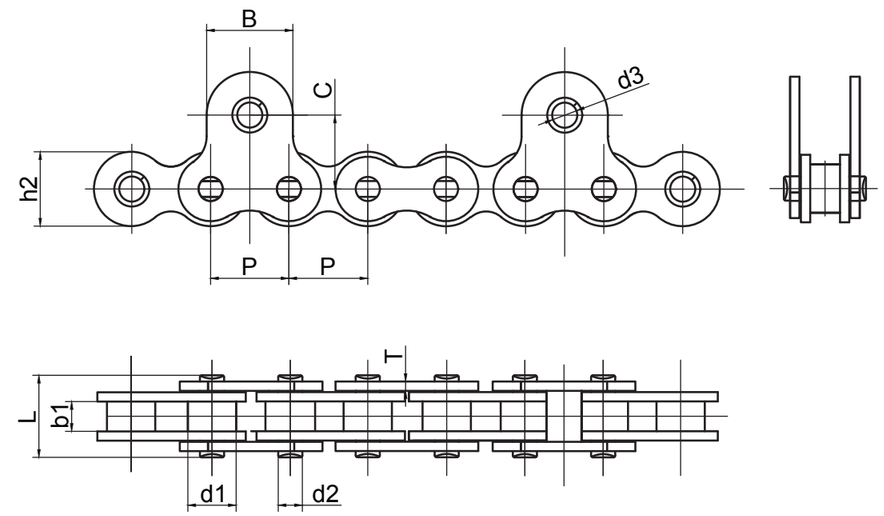


| 征和链号 CHOHO Chain No. | 节距 | 滚子直径 | 内节内宽 | 销轴直径 | 销轴长度 | 内链板高度 | 链板厚度 | 附板尺寸 | | | 抗拉强度 | 平均抗拉强度 |
|---|---|---|---|---|---|---|---|---|---|---|---|---|
| | P | d1 max | b1 min | d2 max | L max | h2 max | T max | B | d3 | C | Q min | $Q_0$ |
| | mm | mm | mm | mm | mm | mm | mm | mm | mm | mm | kN/LB | kN |
| 415S | 12.7 | 7.77 | 4.80 | 3.96 | 13.70 | 14.0 | 1.5 | 14.0 | 4.05 | 12.0 | 14.4 | 16.1 |
| 415SA | 12.7 | 7.77 | 4.90 | 3.96 | 13.70 | 12.0 | 1.5 | 12.0 | 4.50 | 12.0 | 14.4 | 16.1 |
| 415SB | 12.7 | 7.77 | 4.90 | 3.96 | 13.70 | 12.0 | 1.5 | 12.0 | 4.05 | 12.0 | 14.4 | 16.1 |

CHOHO



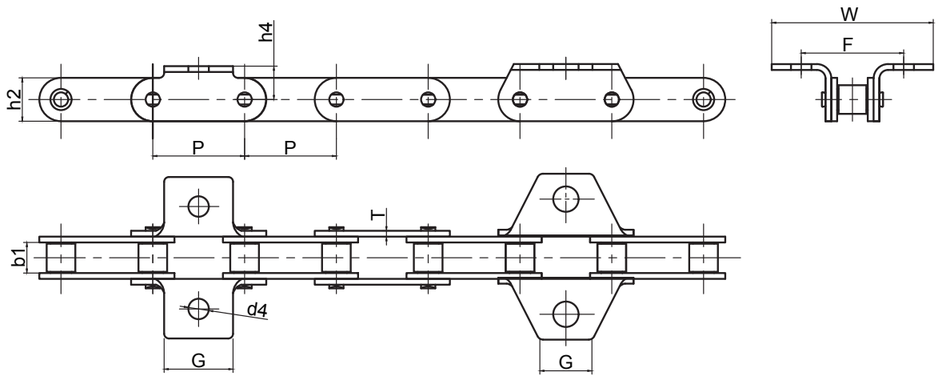


| 征和链号 CHOHO Chain No. | P | b1 | h2 | G | h4 | F | W | d4 | T |
|---|---|---|---|---|---|---|---|---|---|
| | mm | mm | mm | mm | mm | mm | mm | mm | mm |
| C2060K1D1 | 38.1 | 12.57 | 18.1 | 28.6 | 14.7 | 42.9 | 63.7 | 8.5 | 2.42 |
| C2060H-K1D1 | 38.1 | 12.57 | 18.1 | 28.6 | 14.7 | 42.9 | 72.4 | 8.5 | 3.2 |
| C2060K1D1F | 38.1 | 12.57 | 18.1 | 22.0 | 14.7 | 48.0 | 69.0 | 10.5 | 2.42 |
| C2060H-K1D1F | 38.1 | 12.57 | 18.1 | 22.0 | 14.7 | 48.0 | 69.0 | 10.5 | 3.2 |
| C2060HT-K1D1F | 38.1 | 12.57 | 18.1 | 22.0 | 14.7 | 48.0 | 69.0 | 10.5 | 3.2 |



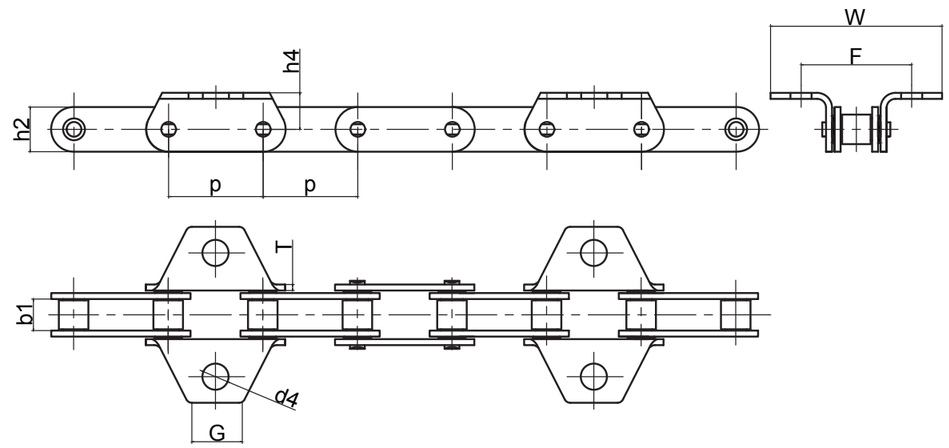


| 征和链号 CHOHO Chain No. | P | b1 | h2 | G | h4 | F | W | d4 |
|---|---|---|---|---|---|---|---|---|
| | mm | mm | mm | mm | mm | mm | mm | mm |
| C2060RO-K1D1F | 38.1 | 12.57 | 18.1 | 22.0 | 14.7 | 48.0 | 69.0 | 10.5 |
| C2060HRO-K1D1F | 38.1 | 12.57 | 18.1 | 22.0 | 14.7 | 48.0 | 69.0 | 10.5 |
| C2060RO-K1D1F-N | 38.1 | 12.57 | 18.1 | 22.0 | 14.7 | 48.0 | 69.0 | 10.5 |

# 水稻收割机链 Rice Harvester Chains



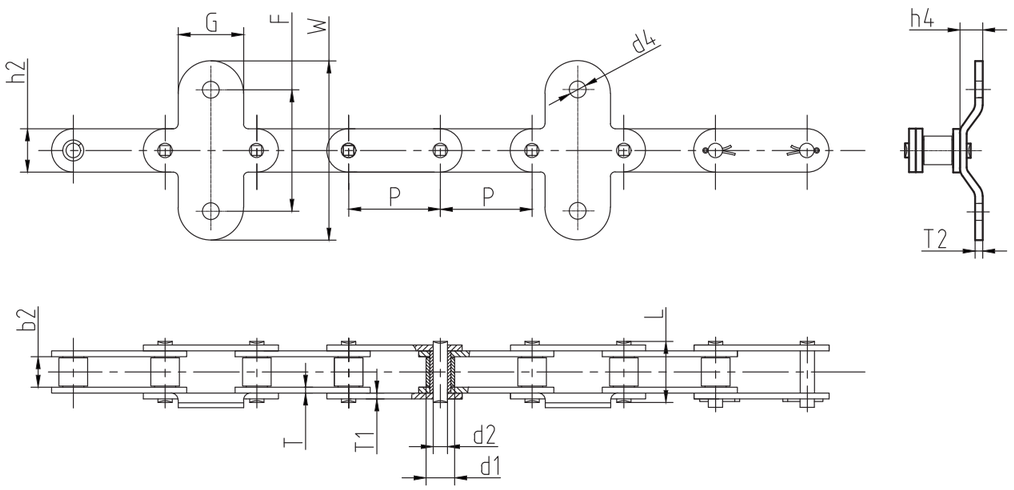


| 征和链号 CHOHO Chain No. | 节距 | 滚子直径 | 销轴直径 | 内节内宽 | 销轴长度 | | 链板尺寸 | | | | 附板尺寸 | | | | | 抗拉强度 |
|---|---|---|---|---|---|---|---|---|---|---|---|---|---|---|---|---|
| | P | d1 max | d2 max | b1 min | L max | Lc max | h2 max | T | T1 | T2 | h4 | G | F | W | d4 | Q min |
| | mm | mm | mm | mm | mm | mm | mm | mm | mm | mm | mm | mm | mm | mm | mm | kN |
| C2060HK1V1 | 38.1 | 11.91 | 5.94 | 12.57 | 29.7 | 31.8 | 12.0 | 3.2 | 3.2 | 3.2 | 9.5 | 27.24 | 51.0 | 74.60 | 6.75 | 31.8 |





# 夹持链 Clamping Chains



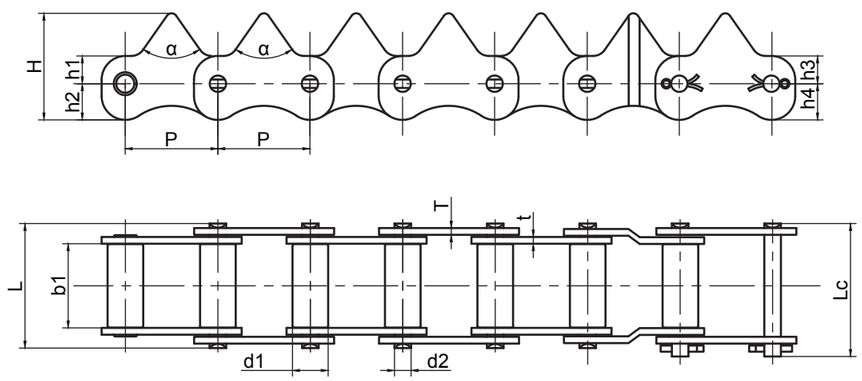


| 征和链号 CHOHO Chain No. | 节距 | 滚子直径 | 内节内宽 | 销轴直径 | 销轴长度 | 接销长度 | 齿形角 | 附板尺寸 | | | | | | | 抗拉强度 |
|---|---|---|---|---|---|---|---|---|---|---|---|---|---|---|---|
| | P | d1 max | b1 min | d2 max | L max | Lc max | α° | h1 | h2 | h3 | h4 | H | T | t | Q min |
| | mm | mm | mm | mm | mm | mm | / | mm | mm | mm | mm | mm | mm | mm | kN |
| 3322-31010 | 33 | 12.7 | 22.00 | 5.94 | 36.40 | 39.40 | 70 | 10.0 | 13.0 | 13.0 | 10.0 | 33.0 | 2.42 | 2.42 | 19.6 |
| 3322-31017 | 33 | 12.7 | 22.00 | 5.94 | 36.40 | 39.40 | 70 | 10.0 | 17.0 | 17.0 | 10.0 | 37.0 | 2.42 | 2.42 | 19.6 |
| 3322-63201 | 33 | 12.7 | 22.00 | 5.94 | 36.40 | 39.40 | 70 | 10.0 | 15.0 | 15.0 | 10.0 | 40.0 | 2.42 | 2.42 | 19.6 |
| 3325-23160 | 33 | 12.8 | 25.00 | 5.94 | 35.50 | 38.10 | 60 | 10.0 | 13.0 | 13.0 | 10.0 | 43.0 | 1.6 | 1.6 | 19.6 |
| 3330-74311 | 33 | 12.7 | 30.00 | 5.94 | 44.40 | 47.40 | 70 | 10.0 | 13.0 | 13.0 | 10.0 | 38.0 | 2.42 | 2.42 | 19.6 |
| 3558-48181 | 35 | 13 | 58.00 | 9.50 | 70.40 | / | 90 | 15.0 | 18.0 | 18.0 | 15.0 | 48.0 | 2 | 2 | 19.6 |

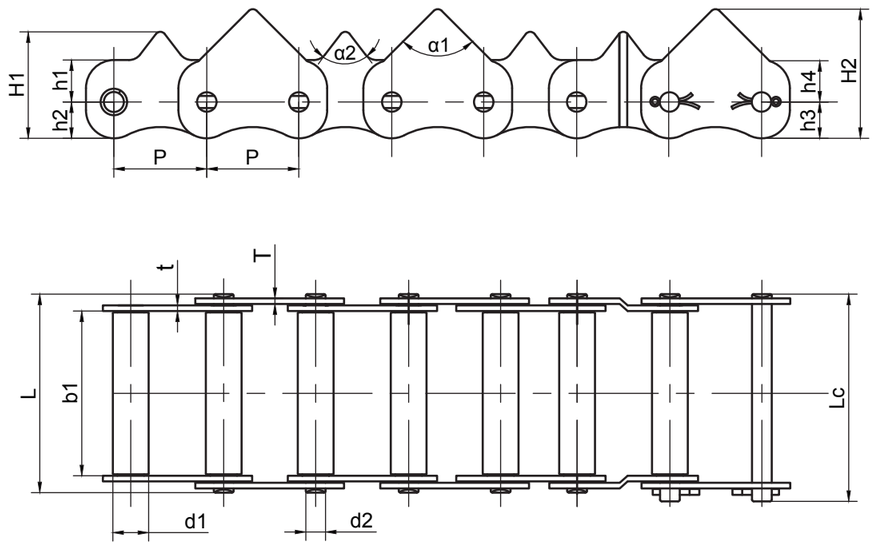


| 征和链号 CHOHO Chain No. | 节距 | 滚子直径 | 内节内宽 | 销轴直径 | 销轴长度 | 接销长度 | 齿形角 | 附板尺寸 | | | | | | | | 抗拉强度 |
|---|---|---|---|---|---|---|---|---|---|---|---|---|---|---|---|---|
| | P | d1 max | b1 min | d2 max | L max | Lc max | α1°/α2° | h1 | h2 | H1 | h3 | h4 | H2 | T | t | Q min |
| | mm | mm | mm | mm | mm | mm | / | mm | mm | mm | mm | mm | mm | mm | mm | kN |
| 3358-5K151 | 33 | 12.75 | 58.00 | 7.00 | 70.25 | 73.60 | 90/70 | 15.0 | 13.0 | 38.0 | 13.0 | 15.0 | 46.0 | 2 | 2 | 19.6 |
| 3358T-5K151 | 33 | 12.8 | 58.00 | 9.50 | 70.40 | 73.00 | 90/75 | 15.0 | 13.0 | 38.0 | 13.0 | 15.0 | 46.0 | 2 | 1.6 | 19.6 |

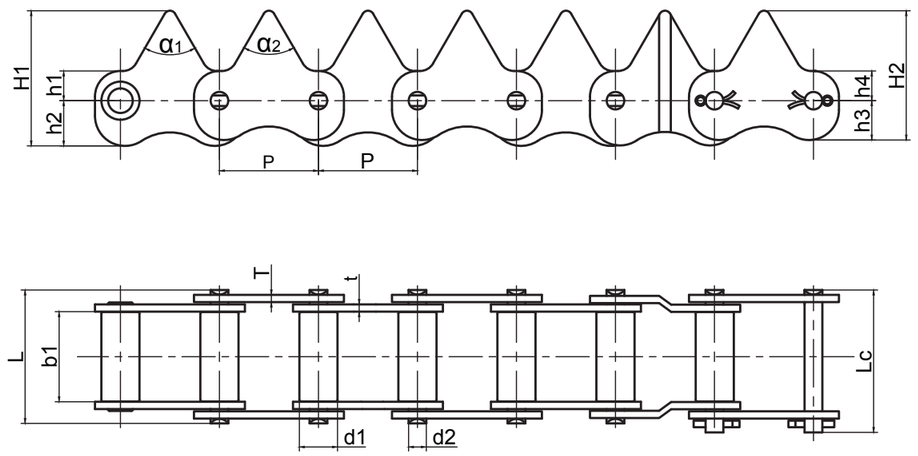


| 征和链号 CHOHO Chain No. | 节距 | 滚子直径 | 内节内宽 | 销轴直径 | 销轴长度 | 接销长度 | 齿形角 | 附板尺寸 | | | | | | | | 抗拉强度 |
|---|---|---|---|---|---|---|---|---|---|---|---|---|---|---|---|---|
| | P | d1 max | b1 min | d2 max | L max | Lc max | α1°/α2° | h1 | h2 | H1 | h3 | h4 | H2 | T | t | Q min |
| | mm | mm | mm | mm | mm | mm | / | mm | mm | mm | mm | mm | mm | mm | mm | kN |
| 3330-66401 | 33 | 12.7 | 30.00 | 5.94 | 44.40 | 47.40 | 60 | 10.0 | 15.0 | 45.0 | 13.0 | 10.0 | 43.0 | 2.42 | 2.42 | 19.6 |

# 夹持链 Clamping Chains



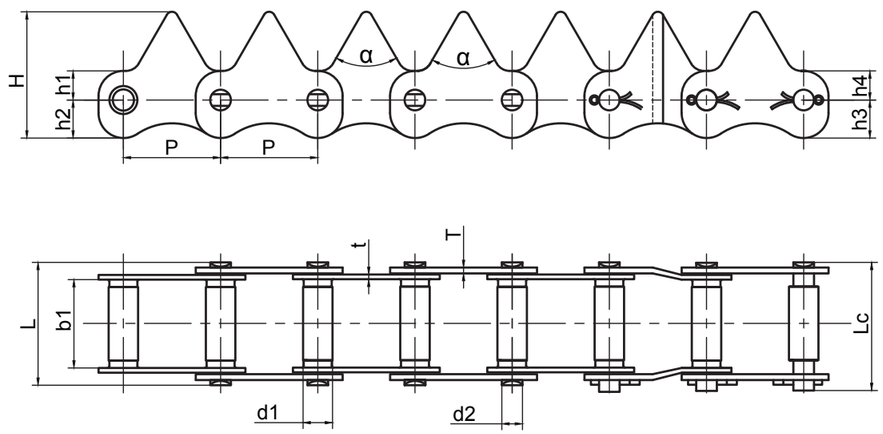


| 征和链号 CHOHO Chain No. | 节距 | 滚子直径 | 内节内宽 | 销轴直径 | 销轴长度 | 接销长度 | 齿形角 | 附板尺寸 | | | | | | | 抗拉强度 |
|---|---|---|---|---|---|---|---|---|---|---|---|---|---|---|---|
| | P | d1 max | b1 min | d2 max | L max | Lc max | α° | h1 | h2 | h3 | h4 | H | T | t | Q min |
| | mm | mm | mm | mm | mm | mm | / | mm | mm | mm | mm | mm | mm | mm | kN |
| 3322T | 33 | 10.1 | 22.00 | 7.00 | 33.50 | 36.70 | 70 | 10.0 | 13.0 | 13.0 | 10.0 | 38.0 | 2 | 1.6 | 19.6 |
| 3330T | 33 | 10.1 | 30.00 | 7.00 | 41.70 | 43.50 | 60 | 10.0 | 13.0 | 13.0 | 10.0 | 43.0 | 2 | 1.6 | 19.6 |
| 3325T-3650 | 33 | 10.1 | 25.00 | 7.00 | 35.50 | 38.10 | 70 | 10.0 | 13.0 | 13.0 | 10.0 | 38.0 | 1.6 | 1.6 | 19.6 |





# 尖齿链 Sharp Tooth Chains



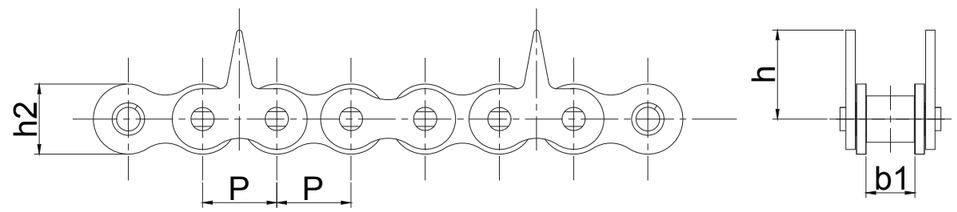


| 征和链号 CHOHO Chain No. | 链板尺寸 | | 内节内宽 | 附板尺寸 |
|---|---|---|---|---|
| | P | h2 | b1 min | h |
| | mm | mm | mm | mm |
| 12A | 19.05 | 18.10 | 12.57 | 22.85 |

# 尖齿链 Sharp Tooth Chains

CHOHO



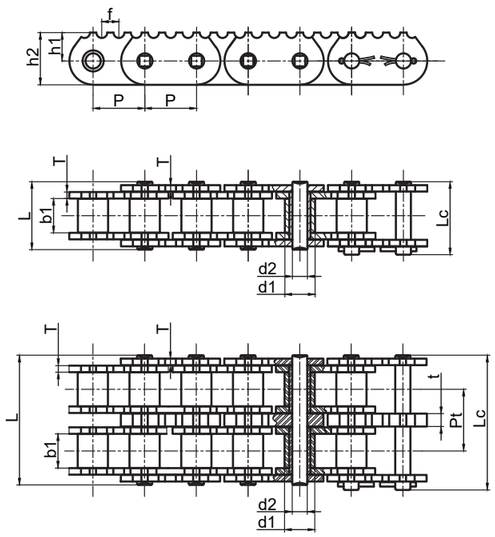


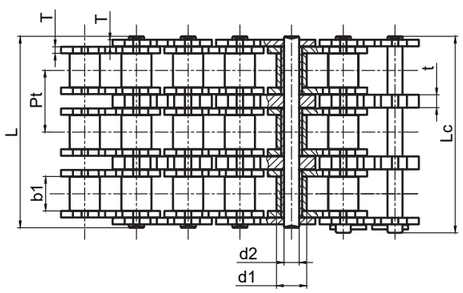


| 征和链号 CHOHO Chain No. | 节距 | 滚子直径 | 内节内宽 | 销轴直径 | 销轴长度 | | 链板尺寸 | | | | | 排距 | 抗拉强度 | 平均抗拉强度 |
|---|---|---|---|---|---|---|---|---|---|---|---|---|---|---|
| | P | d1 max | b1 min | d2 max | L max | Lc max | h2 max | h1 | T | t | f | Pt | Q | $Q_0$ |
| | mm | mm | mm | mm | mm | mm | mm | mm | mm | mm | mm | mm | kN | kN |
| C120-1802-1 | 38.10 | 22.23 | 25.30 | 11.10 | 50.5 | 54.2 | 38.5 | 21.0 | 4.8 | / | 12.7 | / | 127.0 | 157.0 |
| C120-1802-2 | 38.10 | 22.23 | 25.30 | 11.10 | 98 | 101.7 | 38.5 | 21.0 | 4.8 | 9.5 | 12.7 | 45.44 | 254.0 | 314.0 |
| C120-1802-3 | 38.10 | 22.23 | 25.30 | 11.10 | 141 | 144.7 | 38.5 | 21.0 | 4.8 | 9.5 | 12.7 | 45.44 | 381.0 | 434.0 |



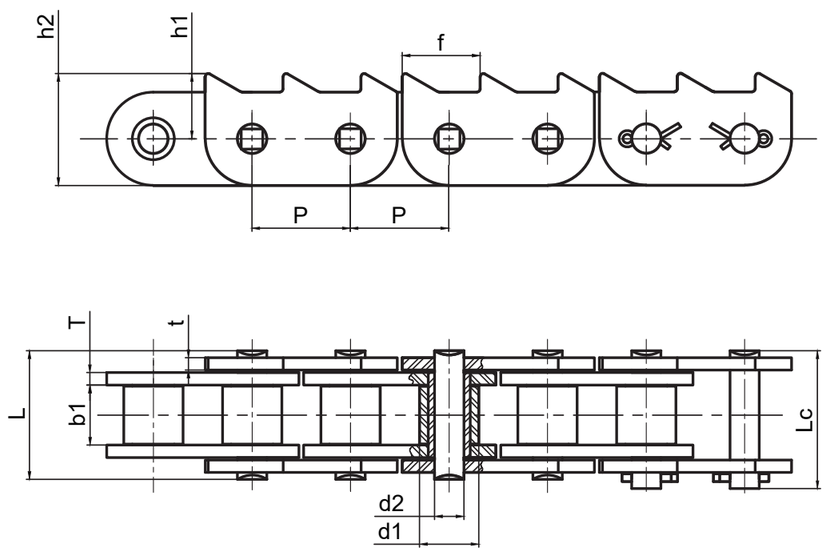


| 征和链号 CHOHO Chain No. | 节距 | 滚子直径 | 内节内宽 | 销轴直径 | 销轴长度 | | 链板尺寸 | | | | 抗拉强度 | 平均抗拉强度 |
|---|---|---|---|---|---|---|---|---|---|---|---|---|
| | P | d1 max | b1 min | d2 max | L max | Lc max | h2 max | h1 | T | T1 | Q | $Q_0$ |
| | mm | mm | mm | mm | mm | mm | mm | mm | mm | mm | kN | kN |
| C100-1200-1 | 31.75 | 19.05 | 18.90 | 9.53 | 40.5 | 43.6 | 36.0 | 21.0 | 4.0 | 4.0 | 88.5 | 95.0 |

# 尖齿链 Sharp Tooth Chains

CHOHO



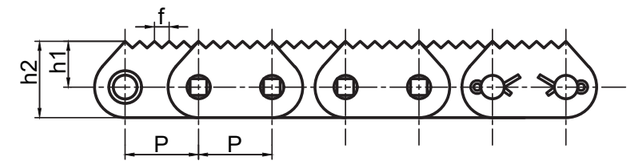


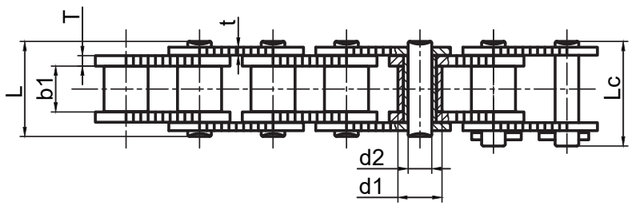


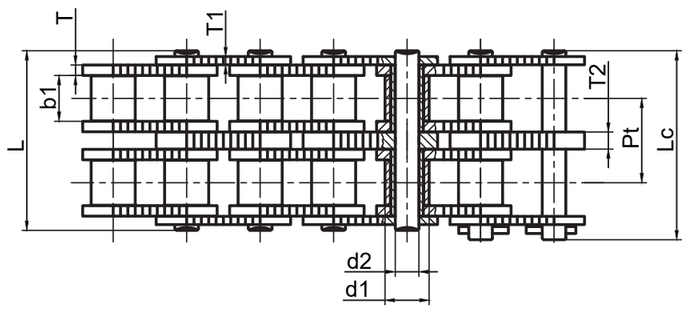


| 征和链号 CHOHO Chain No. | 节距 | 滚子直径 | 内节内宽 | 销轴直径 | 销轴长度 | | 链板尺寸 | | | | | | 排距 | 抗拉强度 | 平均抗拉强度 |
|---|---|---|---|---|---|---|---|---|---|---|---|---|---|---|---|
| | P | d1 max | b1 min | d2 max | L max | Lc max | h2 max | h1 | T | T1 | T2 | f | Pt | Q | $Q_0$ |
| | mm | mm | mm | mm | mm | mm | mm | mm | mm | mm | mm | mm | mm | kN | kN |
| C20B-1310-1 | 31.750 | 19.05 | 19.56 | 10.19 | 40.8 | 45.2 | 33.0 | 19.8 | 4.50 | 3.50 | / | 6.35 | / | 95.0 | 106.0 |
| C20B-1310-2 | 31.750 | 19.05 | 19.56 | 10.19 | 77.2 | 81.6 | 33.0 | 19.8 | 4.50 | 3.50 | 7 | 6.35 | 36.45 | 170.0 | 210.0 |



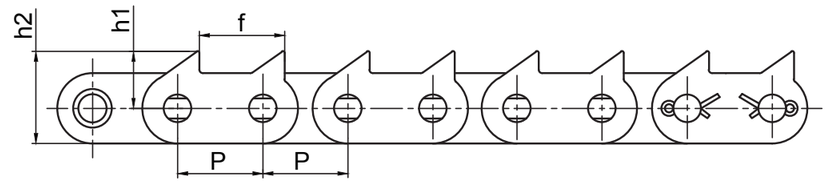


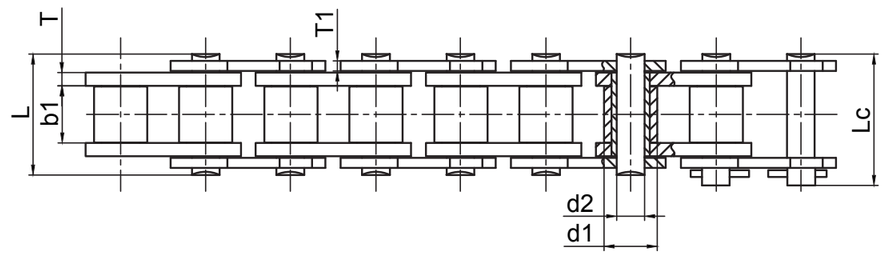


| 征和链号 CHOHO Chain No. | 节距 | 滚子直径 | 内节内宽 | 销轴直径 | 销轴长度 | | 链板尺寸 | | | | | | 排距 | 抗拉强度 | 平均抗拉强度 |
|---|---|---|---|---|---|---|---|---|---|---|---|---|---|---|---|
| | P | d1 max | b1 min | d2 max | L max | Lc max | h2 max | h1 | f | T | T1 | T2 | Pt | Q | $Q_0$ |
| | mm | mm | mm | mm | mm | mm | mm | mm | mm | mm | mm | mm | mm | kN | kN |
| C16B-1161-1 | 25.4 | 15.88 | 17.02 | 8.28 | 36.1 | 39.2 | 21.0 | 17.0 | 25.4 | 4.0 | 3.0 | / | / | 60.0 | 72.5 |

# 尖齿链 Sharp Tooth Chains





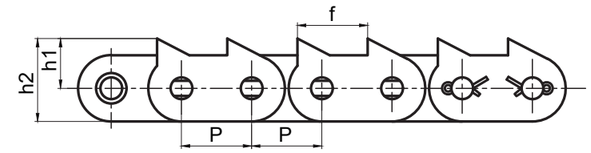


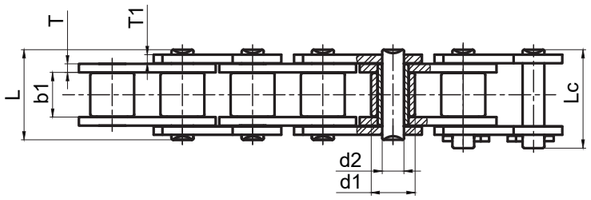


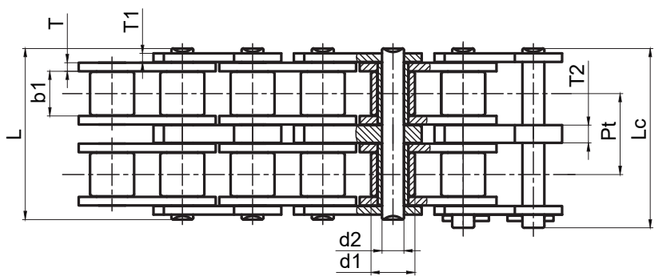


| 征和链号 CHOHO Chain No. | 节距 | 滚子直径 | 内节内宽 | 销轴直径 | 销轴长度 | | 链板尺寸 | | | | | | 排距 | 抗拉强度 | 平均抗拉强度 |
|---|---|---|---|---|---|---|---|---|---|---|---|---|---|---|---|
| | P | d1 max | b1 min | d2 max | L max | Lc max | h2 max | h1 | f | T | T1 | T2 | Pt | Q | $Q_0$ |
| | mm | mm | mm | mm | mm | mm | mm | mm | mm | mm | mm | mm | mm | kN | kN |
| C80-1274-1 | 25.4 | 15.88 | 15.75 | 7.92 | 32.6 | 36.0 | 30.0 | 18.0 | 25.4 | 3.25 | 3.1 | / | / | 56.7 | 73.5 |
| C80-1274-2 | 25.4 | 15.88 | 15.75 | 7.94 | 61.8 | 65.0 | 30.0 | 18.0 | 25.4 | 3.25 | 3.1 | 6.4 | 29.29 | 113.4 | 142.0 |

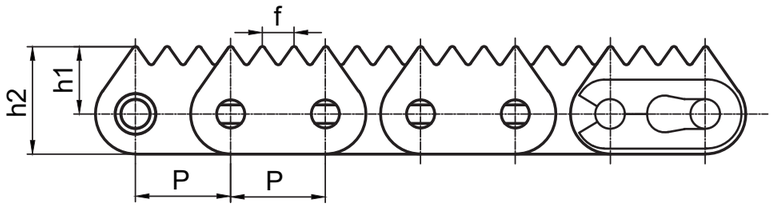


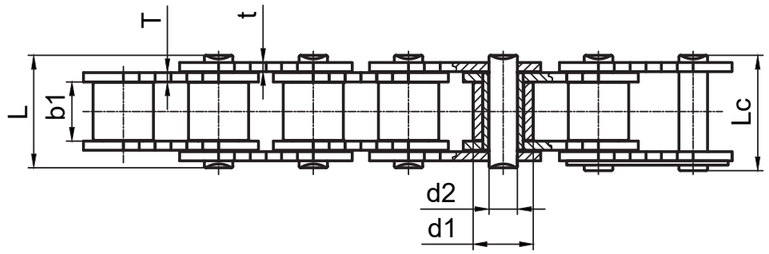


| 征和链号 CHOHO Chain No. | 节距 | 滚子直径 | 销轴直径 | 内节内宽 | 销轴长度 | | 链板尺寸 | | | | | 抗拉强度 | 平均抗拉强度 |
|---|---|---|---|---|---|---|---|---|---|---|---|---|---|
| | P | d1 max | d2 max | b1 min | L max | Lc max | h2 max | h1 | T | t | f | Q | $Q_0$ |
| | mm | mm | mm | mm | mm | mm | mm | mm | mm | mm | mm | kN | kN |
| C12B-1325-1 | 19.05 | 12.07 | 5.72 | 11.68 | 22.5 | 24 | 21.5 | 13.5 | 1.85 | 1.85 | 6.35 | 28.9 | 32.3 |

# 尖齿链 Sharp Tooth Chains

CHOHO



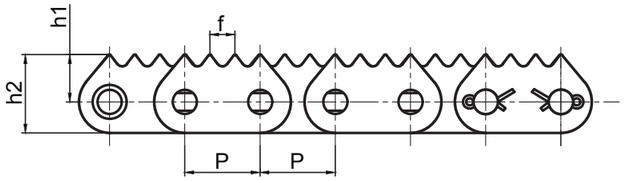


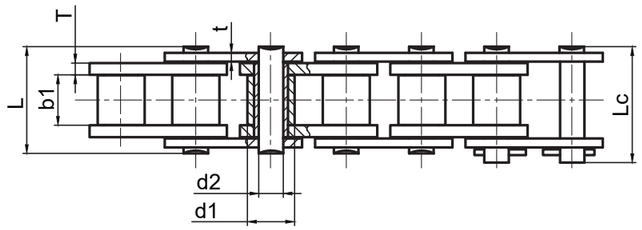


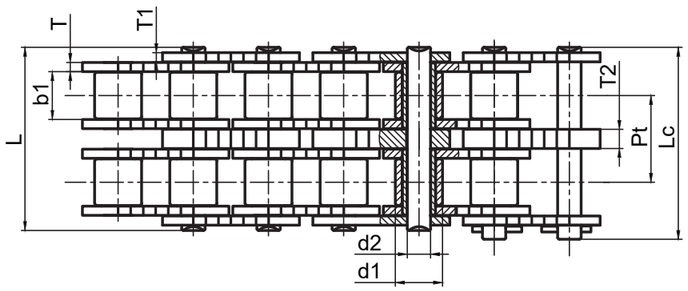


| 征和链号 CHOHO Chain No. | 节距 | 滚子直径 | 内节内宽 | 销轴直径 | 销轴长度 | | 链板尺寸 | | | | | | 排距 | 抗拉强度 | 平均抗拉强度 |
|---|---|---|---|---|---|---|---|---|---|---|---|---|---|---|---|
| | P | d1 max | b1 min | d2 max | L max | Lc max | h2 max | h1 | T | T1/t | T2 | f | Pt | Q min | $Q_0$ |
| | mm | mm | mm | mm | mm | mm | mm | mm | mm | mm | mm | mm | mm | kN | kN |
| C16B-1230-1 | 25.4 | 15.88 | 17.02 | 8.28 | 35.9 | 39.2 | 26.5 | 16.0 | 4.0 | 3.0 | / | 8.47 | / | 60.0 | 72.5 |
| C80-1230-2 | 25.4 | 15.88 | 15.75 | 7.94 | 62 | 65.0 | 28.0 | 16.5 | 3.10 | 3.10 | 6.40 | 8.47 | 29.29 | 113.4 | 142.0 |

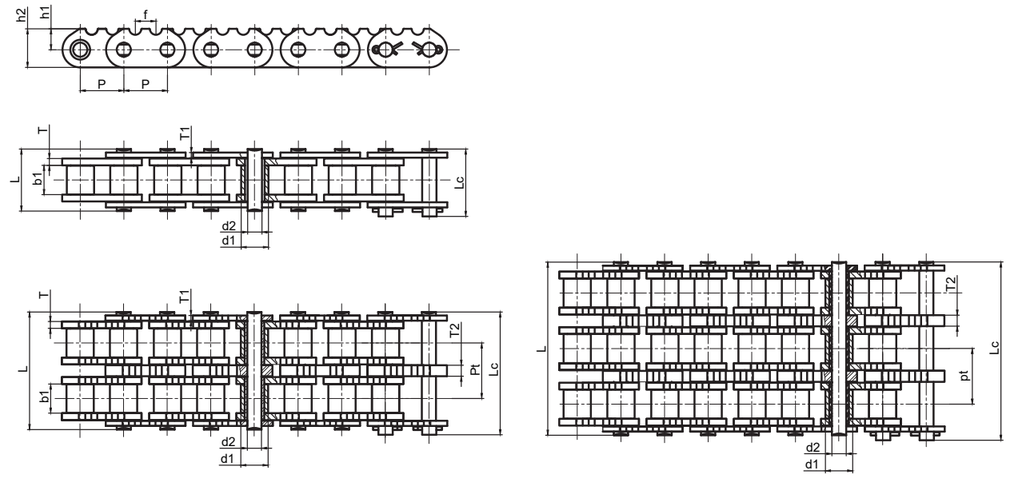


| 征和链号 CHOHO Chain No. | 节距 | 滚子直径 | 内节内宽 | 销轴直径 | 销轴长度 | | 链板尺寸 | | | | | | 排距 | 抗拉强度 | 平均抗拉强度 |
|---|---|---|---|---|---|---|---|---|---|---|---|---|---|---|---|
| | P | d1 max | b1 min | d2 max | L max | Lc max | h2 max | h1 | f | T | T1 | T2 | Pt | Q min | $Q_0$ |
| | mm | mm | mm | mm | mm | mm | mm | mm | mm | mm | mm | mm | mm | kN | kN |
| C16B-1180-1 | 25.400 | 15.88 | 17.02 | 8.28 | 35.9 | 39.2 | 22.5 | 12.2 | 12.0 | 4.0 | 3.0 | / | / | 60.0 | 72.5 |
| C16B-1180-2 | 25.400 | 15.88 | 17.02 | 8.28 | 67.8 | 71 | 22.5 | 12.2 | 12.0 | 4.0 | 3.0 | 6.0 | 31.88 | 106.0 | 124.0 |
| C16B-1180-3 | 25.400 | 15.88 | 17.02 | 8.28 | 99.6 | 102.5 | 22.5 | 12.2 | 12.0 | 4.0 | 3.0 | 6.0 | 31.88 | 160.0 | 196.0 |

# 尖齿链 Sharp Tooth Chains

CHOHO



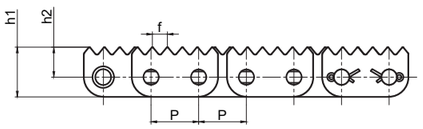


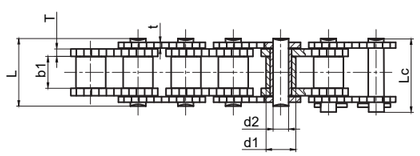


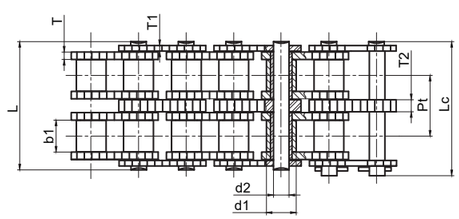


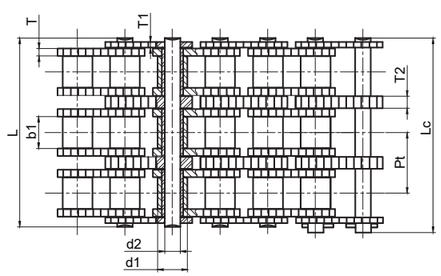


| 征和链号 CHOHO Chain No. | 节距 | 滚子直径 | 内节内宽 | 销轴直径 | 销轴长度 | | 链板尺寸 | | | | | | 排距 | 抗拉强度 | 平均抗拉强度 |
|---|---|---|---|---|---|---|---|---|---|---|---|---|---|---|---|
| | P | d1 max | b1 min | d2 max | L max | Lc max | h2 max | h1 | f | T | T1 | T2 | Pt | Q min | $Q_0$ |
| | mm | mm | mm | mm | mm | mm | mm | mm | mm | mm | mm | mm | mm | kN | kN |
| C16B-1186-1 | 25.4 | 15.88 | 17.02 | 8.28 | 36.1 | 39.2 | 26.5 | 16.0 | 8.0 | 4.0 | 3.0 | / | / | 60.0 | 72.5 |
| C16B-1186-2 | 25.4 | 15.88 | 17.02 | 8.28 | 67.8 | 71 | 26.5 | 16.0 | 8.0 | 4.0 | 3.0 | 6.0 | 31.88 | 106.0 | 124.0 |
| C16B-1186-3 | 25.4 | 15.88 | 17.02 | 8.28 | 99.6 | 102.5 | 26.5 | 16.0 | 8.0 | 4.0 | 3.0 | 6.0 | 31.88 | 160.0 | 184.0 |



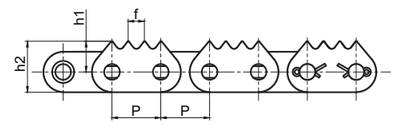


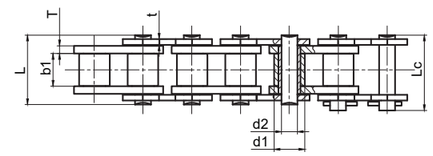


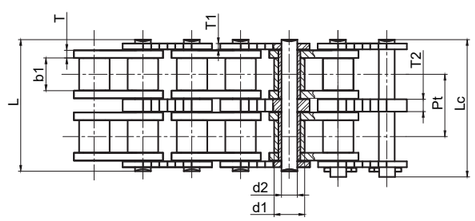


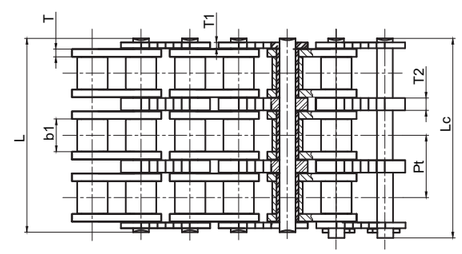


| 征和链号 CHOHO Chain No. | 节距 | 滚子直径 | 内节内宽 | 销轴直径 | 销轴长度 | | 链板尺寸 | | | | | | 排距 | 抗拉强度 | 平均抗拉强度 |
|---|---|---|---|---|---|---|---|---|---|---|---|---|---|---|---|
| | P | d1 max | b1 min | d2 max | L max | Lc max | h2 max | h1 | f | T | T1 | T2 | Pt | Q min | $Q_0$ |
| | mm | mm | mm | mm | mm | mm | mm | mm | mm | mm | mm | mm | mm | kN | kN |
| C16B-1170-1 | 25.4 | 15.88 | 17.02 | 8.28 | 35.9 | 39.2 | 26.5 | 16.0 | 8.47 | 4.0 | 3.0 | / | / | 60.0 | 72.5 |
| C16B-1170-2 | 25.4 | 15.88 | 17.02 | 8.28 | 67.8 | 71 | 26.5 | 16.0 | 8.47 | 4.0 | 3.0 | 6.0 | 31.88 | 106.0 | 124.0 |
| C16B-1170-3 | 25.4 | 15.88 | 17.02 | 8.28 | 99.6 | 102.3 | 26.5 | 16.0 | 8.47 | 4.0 | 3.0 | 6.0 | 31.88 | 160.0 | 187.0 |

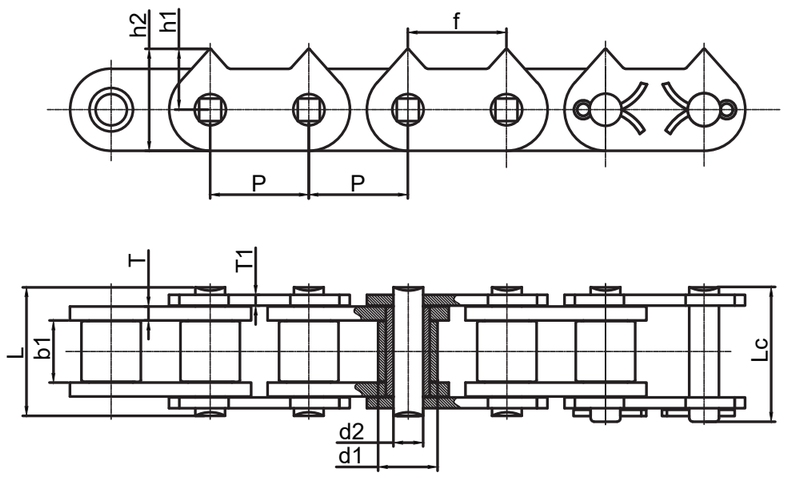


| 征和链号 CHOHO Chain No. | 节距 | 滚子直径 | 内节内宽 | 销轴直径 | 销轴长度 | | 链板尺寸 | | | | | | 排距 | 抗拉强度 | 平均抗拉强度 |
|---|---|---|---|---|---|---|---|---|---|---|---|---|---|---|---|
| | P | d1 max | b1 min | d2 max | L max | Lc max | h2 max | h1 | f | T | T1 | T2 | Pt | Q min | $Q_0$ |
| | mm | mm | mm | mm | mm | mm | mm | mm | mm | mm | mm | mm | mm | kN | kN |
| C20B-1350-1 | 31.750 | 19.05 | 19.56 | 10.19 | 40.8 | 45.2 | 33.0 | 19.8 | 31.75 | 4.5 | 3.5 | / | / | 95.0 | 106.0 |

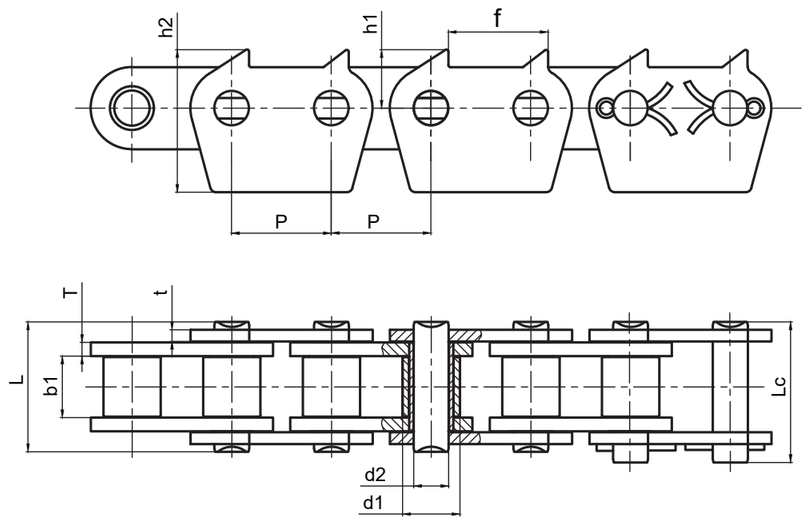


| 征和链号 CHOHO Chain No. | 节距 | 滚子直径 | 内节内宽 | 销轴直径 | 销轴长度 | | 链板尺寸 | | | | | 抗拉强度 | 平均抗拉强度 |
|---|---|---|---|---|---|---|---|---|---|---|---|---|---|
| | P | d1 max | b1 min | d2 max | L max | Lc max | h2 max | h1 | f | T | T1 | Q min | $Q_0$ |
| | mm | mm | mm | mm | mm | mm | mm | mm | mm | mm | mm | kN | kN |
| C32B-1874-1 | 50.800 | 29.21 | 30.99 | 17.81 | 66.5 | 72 | 73.0 | 30.0 | 50.80 | 7.0 | 6.0 | 250.0 | 270.0 |

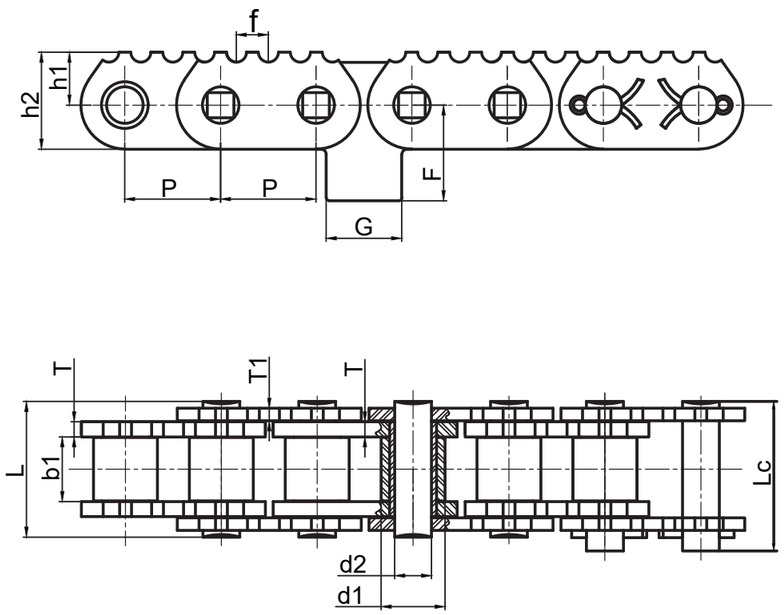


| 征和链号 CHOHO Chain No. | 节距 | 滚子直径 | 内节内宽 | 销轴直径 | 销轴长度 | | 链板尺寸 | | | | | | | | 抗拉强度 | 平均抗拉强度 |
|---|---|---|---|---|---|---|---|---|---|---|---|---|---|---|---|---|
| | P | d1 max | b1 min | d2 max | L max | Lc max | h2 max | h1 | f | T | T1 | G | F | T1 | Q min | $Q_0$ |
| | mm | mm | mm | mm | mm | mm | mm | mm | mm | mm | mm | mm | mm | mm | kN | kN |
| C24B-1809-1 | 38.100 | 25.4 | 25.40 | 14.63 | 53.4 | 59.4 | 38.5 | 21.0 | 12.70 | 6.0 | 4.8 | 30.0 | 38.0 | 160.0 | 196.0 | 270.0 |

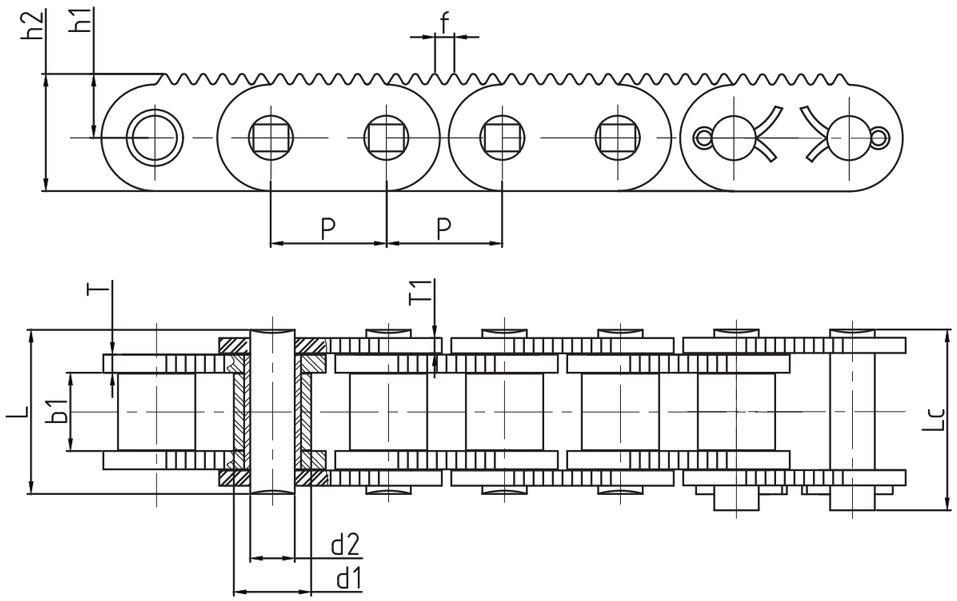


| 征和链号 CHOHO Chain No. | 节距 | 滚子直径 | 内节内宽 | 销轴直径 | 销轴长度 | | 链板尺寸 | | | | | | 排距 | 抗拉强度 | 平均抗拉强度 |
|---|---|---|---|---|---|---|---|---|---|---|---|---|---|---|---|
| | P | d1 max | b1 min | d2 max | L max | Lc max | h2 max | h1 | f | T | T1 | T2 | Pt | Q min | $Q_0$ |
| | mm | mm | mm | mm | mm | mm | mm | mm | mm | mm | mm | mm | mm | kN | kN |
| C24B-1820-1 | 38.1 | 25.4 | 25.40 | 14.63 | 53.4 | 59.4 | 38.5 | 21 | 6.35 | 6.00 | 4.80 | / | / | 160.0 | 196.0 |

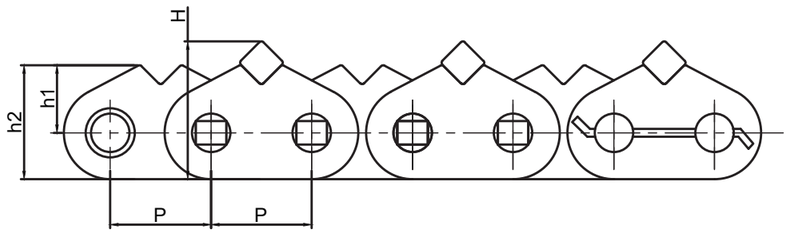


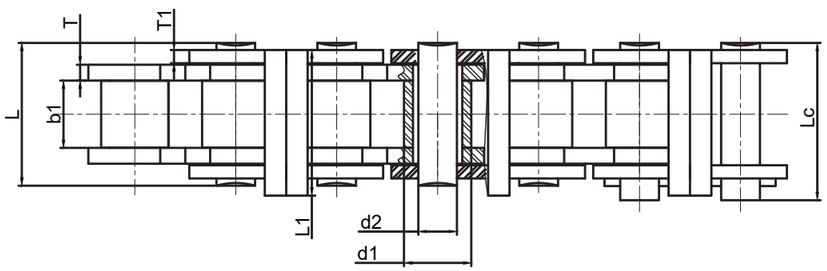


| 征和链号 CHOHO Chain No. | 节距 | 滚子直径 | 内节内宽 | 销轴直径 | 销轴长度 | | 链板尺寸 | | | | | | 抗拉强度 | 平均抗拉强度 |
|---|---|---|---|---|---|---|---|---|---|---|---|---|---|---|
| | P | d1 max | b1 min | d2 max | L max | Lc max | h2 max | h1 | H | L1 | T | T1 | Q min | $Q_0$ |
| | mm | mm | mm | mm | mm | mm | mm | mm | mm | mm | mm | mm | kN | kN |
| C24B-915-1 | 38.100 | 25.4 | 25.40 | 14.63 | 53.4 | 59.4 | 43.0 | 25.5 | 52.0 | 55.00 | 6.0 | 4.8 | 160.0 | 196.0 |

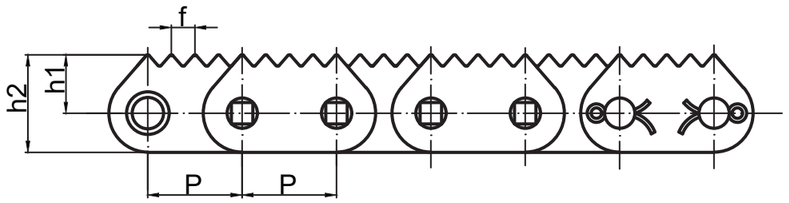


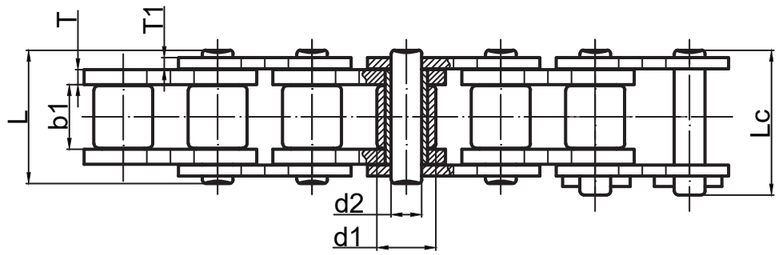


| 征和链号 CHOHO Chain No. | 节距 | 滚子直径 | 内节内宽 | 销轴直径 | 销轴长度 | | 链板尺寸 | | | | | 抗拉强度 | 平均抗拉强度 |
|---|---|---|---|---|---|---|---|---|---|---|---|---|---|
| | P | d1 max | b1 min | d2 max | L max | Lc max | h2 max | h1 | f | T | T1 | Q min | $Q_0$ |
| | mm | mm | mm | mm | mm | mm | mm | mm | mm | mm | mm | kN | kN |
| C16B-1125-1 | 25.4 | 15.88 | 17.02 | 8.28 | 35.9 | 39.2 | 26.5 | 16.0 | 6.350 | 4.0 | 3.0 | 60.0 | 72.5 |

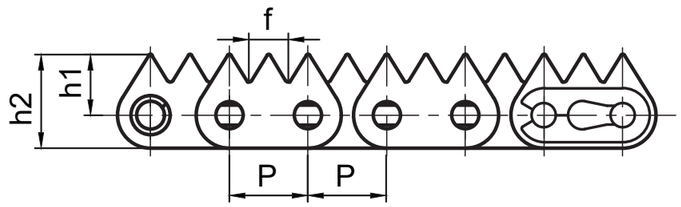


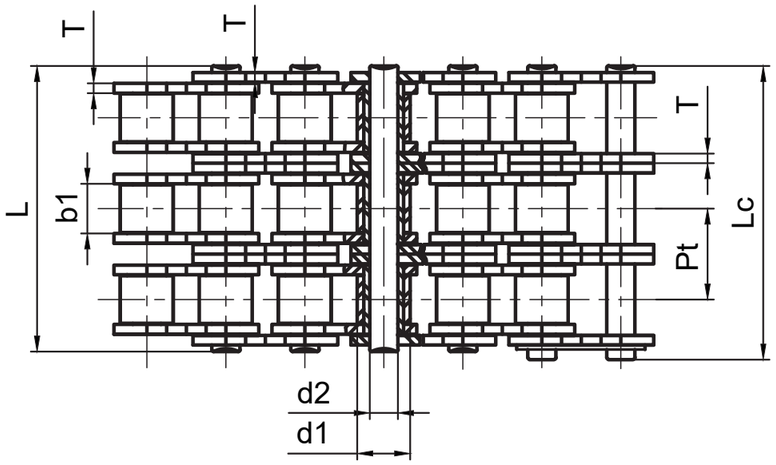


| 征和链号 CHOHO Chain No. | 节距 | 滚子直径 | 内节内宽 | 销轴直径 | 销轴长度 | 链板尺寸 | | | | 排距 | 抗拉强度 | 平均抗拉强度 |
|---|---|---|---|---|---|---|---|---|---|---|---|---|
| | P | d1 max | b1 min | d2 max | L max | h2 max | h1 | f | T | Pt | Q min | $Q_0$ |
| | mm | mm | mm | mm | mm | mm | mm | mm | mm | mm | kN | kN |
| C08BF71-3 | 12.7 | 8.51 | 7.75 | 4.45 | 44.9 | 15.1 | 9.75 | 6.35 | 1.56 | 13.92 | 44.5 | 60.0 |

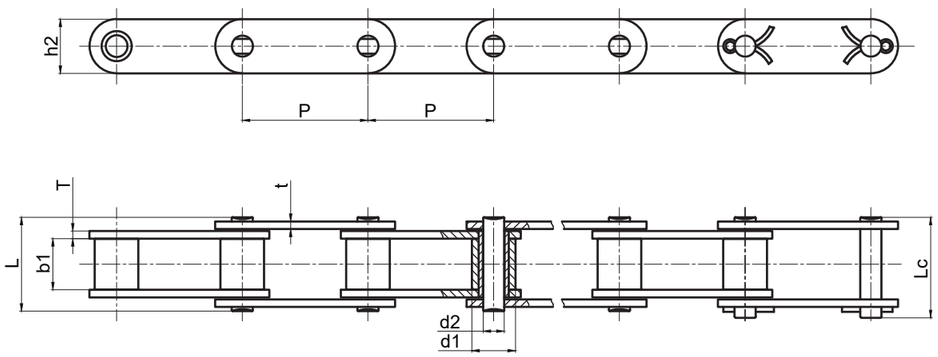


| 征和链号 CHOHO Chain No. | 节距 | 滚子直径 | 内节内宽 | 销轴直径 | 销轴长度 | | 内链板高度 | 链板厚度 | | 抗拉强度 | 平均抗拉强度 | 每米长重 |
|---|---|---|---|---|---|---|---|---|---|---|---|---|
| | P | d1 max | b1 min | d2 max | L max | Lc max | h2 max | T max | t max | Q min | $Q_0$ | q |
| | mm | mm | mm | mm | mm | mm | mm | mm | mm | kN | kN | kg/m |
| 81X | 66.27 | 23.02 | 26.99 | 11.1 | 49.0 | 52.3 | 28.60 | 4.00 | 4.00 | 106.7 | 128.9 | 3.78 |
| 81XH | 66.27 | 23.02 | 27.00 | 11.1 | 60.8 | 64.2 | 31.40 | 8.00 | 5.60 | 151.2 | 175.7 | 5.88 |
| 81XHH | 66.27 | 23.02 | 27.00 | 11.1 | 64.4 | 67.4 | 31.40 | 8.00 | 7.20 | 191.1 | 212.6 | 6.7 |
| 81X-KD | 66.27 | 23.02 | 26.99 | 11.1 | 49.9 | 53.2 | 28.60 | 4.00 | 4.00 | 106.7 | 128.9 | 3.78 |

# 木材输送链及附件 Wood Transport Chains and Accessories



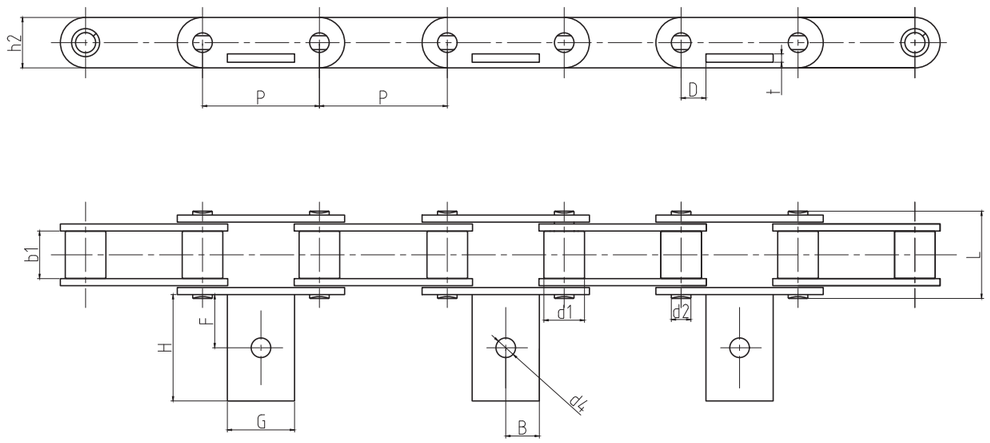


| 征和链号 CHOHO Chain No. | P | d1 | d2 | h2 | b1 | H | G | F | B | D | t | L | d4 |
|---|---|---|---|---|---|---|---|---|---|---|---|---|---|
| | mm | mm | mm | mm | min | mm | mm | mm | mm | mm | mm | mm | mm |
| 81X-CW | 66.27 | 23.02 | 11.10 | 28.60 | 26.99 | 60.23 | 38.10 | 30.16 | 19.05 | 14.08 | 4.80 | 49.00 | 11.11 |





# 打捆机链 Baling Machine Chains

GS38 链条及附件 GS38 Chain and Accessories
S 型钢制农机链及附件 S Type Steel Agricultural Chains and Accessories
A 型钢制农机链及附件 A Type Steel Agricultural Chains and Accessories
C/CA 型钢制农机链及附件 C/CA Type Steel Agricultural Chains and Accessories
水稻收割机链 Rice harvester Chains
夹持链 Clamping Chains
其他农机链及附件 Other Agricultural Chains and Accessories
传动链 Driving Chains

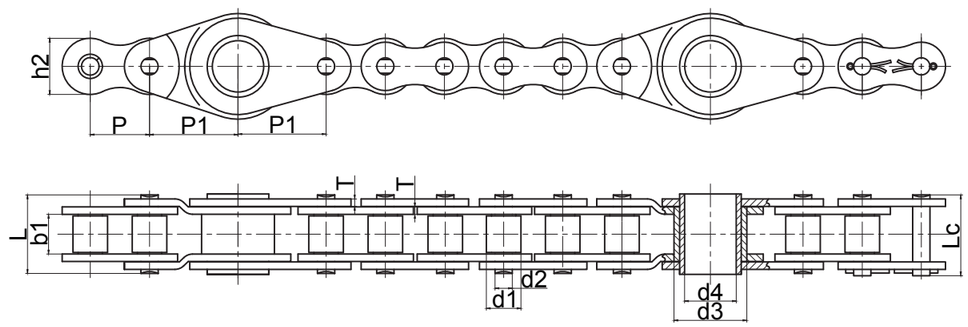


| 征和链号 CHOHO Chain No. | 节距 | | 滚子直径 | 销轴直径 | 大套筒直径 | 空心销轴内径 | 内节内宽 | 销轴长度 | | 链板尺寸 | | 抗拉强度 | 平均抗拉强度 |
|---|---|---|---|---|---|---|---|---|---|---|---|---|---|
| | P | P1 | d1 max | d2 max | d3 max | d4 min | b1 min | L max | Lc max | h2 max | T | Q min | $Q_0$ |
| | mm | mm | mm | mm | mm | mm | mm | mm | mm | mm | mm | kN | kN |
| 24AF1 | 38.100 | 56.690 | 22.23 | 11.10 | 47.10 | 33.30 | 25.30 | 50.5 | 54.3 | 36.1 | 4.8 | 127.0 | 170.0 |

# 打捆机链 Baling Machine Chains



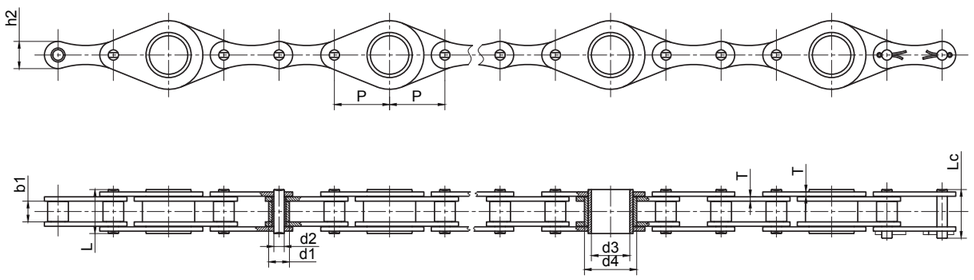


| 征和链号 CHOHO Chain No. | 节距 | 滚子直径 | 销轴直径 | 内节内宽 | 大套筒直径 | 空心销轴内径 | 销轴长度 | | 链板尺寸 | | 抗拉强度 | 平均抗拉强度 |
|---|---|---|---|---|---|---|---|---|---|---|---|---|
| | P | d1 max | d2 max | b1 min | d4 max | d3 min | L max | Lc max | h2 max | T | Q min | $Q_0$ |
| | mm | mm | mm | mm | mm | mm | mm | mm | mm | mm | kN | kN |
| CA650F3 | 50.800 | 19.05 | 9.53 | 19.05 | 48.00 | 35.30 | 40.4 | 44.7 | 25.0 | 4.0 | 90.0 | 110.0 |



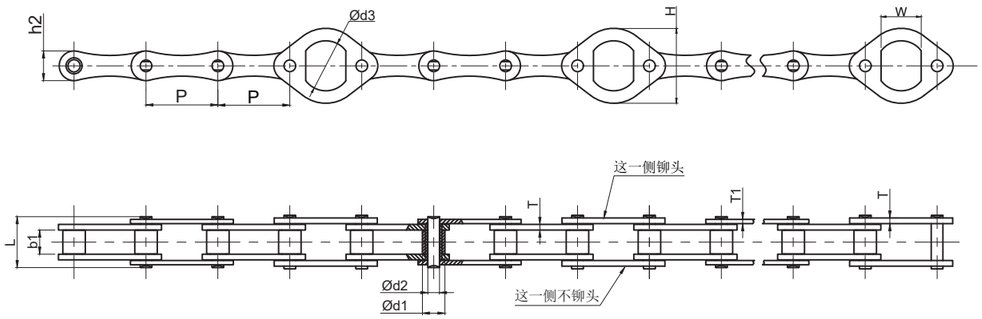


| 征和链号 CHOHO Chain No. | 节距 | | 滚子直径 | 销轴直径 | 内节内宽 | 附板孔径直径 | 附板高度 | 销轴长度 | 链板尺寸 | | | 抗拉强度 |
|---|---|---|---|---|---|---|---|---|---|---|---|---|
| | P | P1 | d1 max | d2 max | b1 min | d3 | H | L max | h2 max | T | T1 | Q min |
| | mm | mm | mm | mm | mm | mm | mm | mm | mm | mm | mm | kN |
| 216BF10 | 50.80 | 15.88 | 8.28 | 17.02 | 35.30 | 52.80 | 36.10 | 21.0 | 4.0 | 3.0 | 60.0 | 127.0 |

# 采棉机链 Cotton Harvester Chains





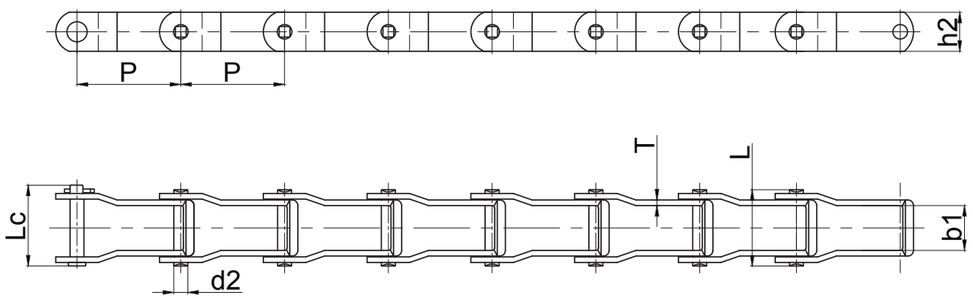


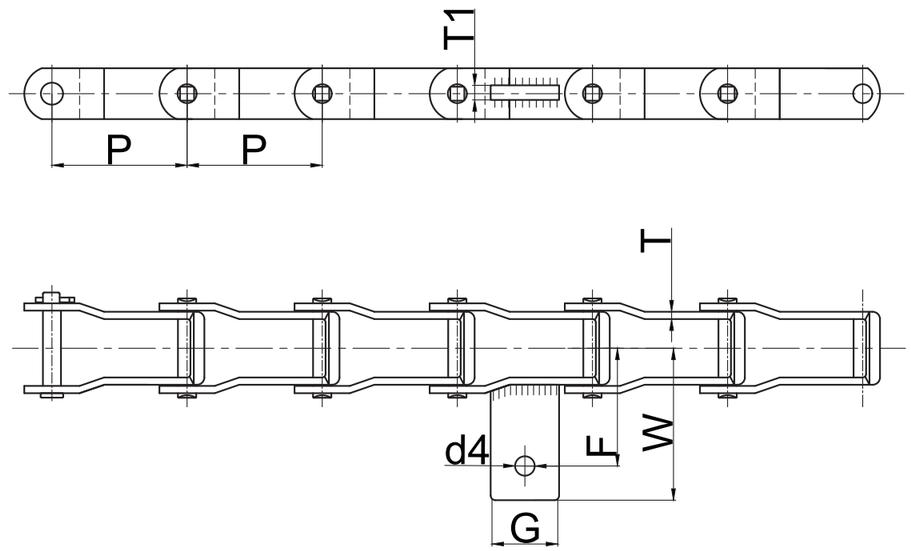


| 征和链号 CHOHO Chain No. | 节距 | 内节内宽 | 销轴直径 | 销轴长度 | | 链板尺寸 | | 抗拉强度 | 平均抗拉强度 | 每米长重 |
|---|---|---|---|---|---|---|---|---|---|---|
| | P | b1 min | d2 max | L max | Lc max | h2 max | T max | Q min | $Q_0$ | q |
| | mm | mm | mm | mm | mm | mm | mm | kN | kN | kg/m |
| 667H | 58.75 | 25.40 | 7.92 | 43.70 | 46.60 | 22.3 | 3.20 | 42.3/9515 | 60.0 | 1.81 |

| 征和链号 CHOHO Chain No. | P | T | G | F | W | d4 | T1 |
|---|---|---|---|---|---|---|---|
| | mm | mm | mm | mm | min | mm | mm |
| 667H-AS | 58.75 | 3.2 | 29.7 | 51.6 | 66.6 | 8.5 | 6.4 |

# 空心销轴链 Hollow Pin Chains





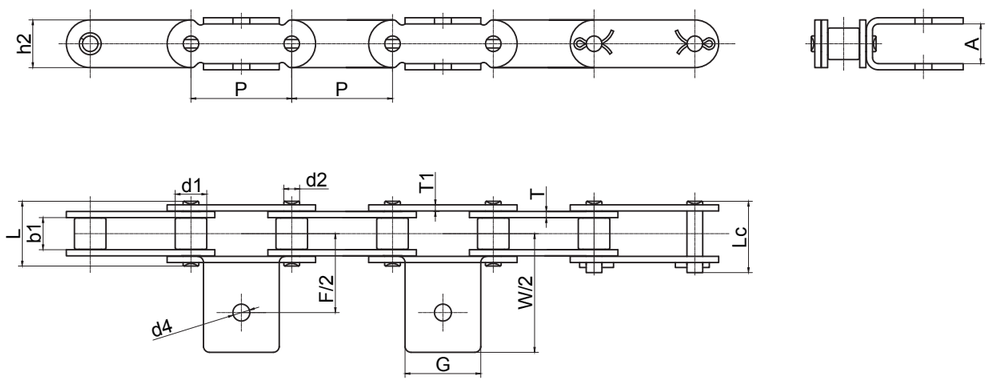


| 征和链号 CHOHO Chain No. | 节距 | 滚子直径 | 销轴直径 | 内节内宽 | 销轴长度 | | 链板尺寸 | | 附板尺寸 | | | | | 抗拉强度 |
|---|---|---|---|---|---|---|---|---|---|---|---|---|---|---|
| | P | d1 max | d2 max | b1 min | L max | Lc max | h2 max | T | G | A | F | W | d4 | Q min |
| | mm | mm | mm | mm | mm | mm | mm | mm | mm | mm | mm | mm | mm | kN |
| C2080K1F4 | 50.8 | 15.88 | 7.92 | 15.75 | 32.6 | 35.9 | 24.0 | 3.1 | 38.1 | 20.0 | 80.0 | 120.0 | 8.5 | 56.7 |

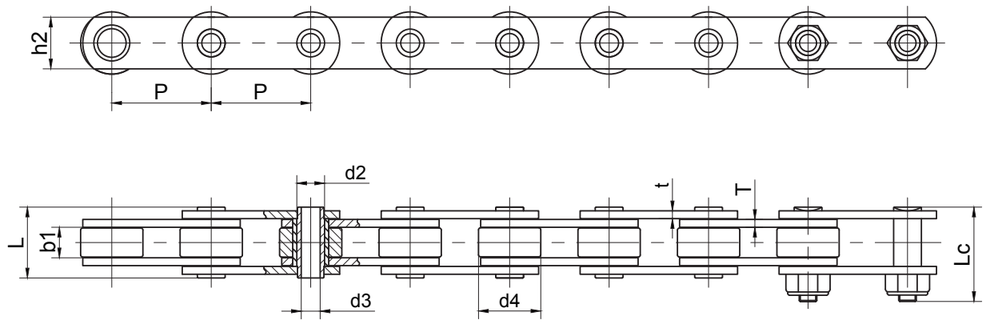


| 征和链号 CHOHO Chain No. | 节距 | 内节内宽 | 销轴外径 | 销轴内径 | 滚子外径 | 销轴长度 | | 链板尺寸 | | | 抗拉强度 | 平均抗拉强度 | 每米长重 |
|---|---|---|---|---|---|---|---|---|---|---|---|---|---|
| | P | b1 min | d2 max | d3 min | d4 max | L max | Lc max | h2 max | T max | t max | Q min | $Q_0$ | q |
| | mm | mm | mm | mm | mm | mm | mm | mm | mm | mm | kN | kN | kg/m |
| 4202HP | 50.80 | 15.20 | 14.30 | 10.05 | 31.80 | 36.80 | 50 | 26.80 | 4 | 4 | 60 | 80.0 | 3.97 |
| CT-2HPS | 50.80 | 15.20 | 14.30 | 10.05 | 38.10 | 36.80 | 50 | 26.80 | 4 | 4 | 60 | 80.0 | 4.69 |
| CT-2HPX | 50.80 | 15.20 | 14.30 | 9.67 | 38.10 | 36.80 | 50 | 26.80 | 4 | 4 | 75 | 85.0 | 4.69 |

# 空心销轴链 Hollow Pin Chains





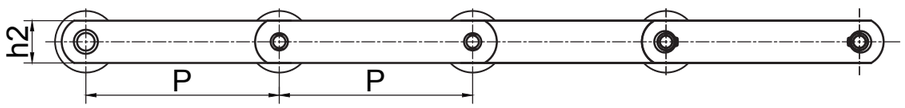


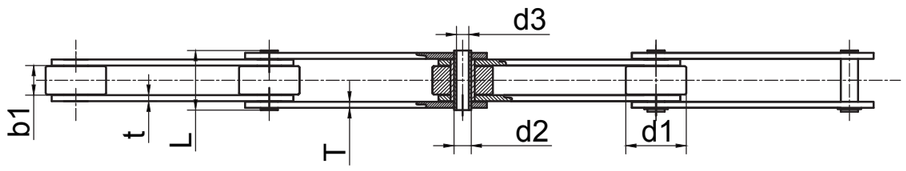


| 征和链号 CHOHO Chain No. | 节距 | 内节内宽 | 销轴外径 | 销轴内径 | 滚子外径 | 销轴长度 | 链板尺寸 | | | 抗拉强度 | 平均抗拉强度 | 每米长重 |
|---|---|---|---|---|---|---|---|---|---|---|---|---|
| | P | b1 min | d2 max | d3 min | d4 max | L max | h2 | T | t | Q min | $Q_0$ | q |
| | mm | mm | mm | mm | mm | mm | mm | mm | mm | kN | kN | kg/m |
| P160V | 160.00 | 24.00 | 15.50 | 10.30 | 50.00 | 50.00 | 35.20 | 5.00 | 5.00 | 100.00 | 140.0 | 5.19 |



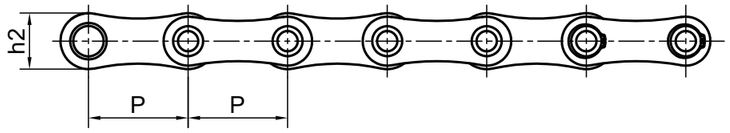


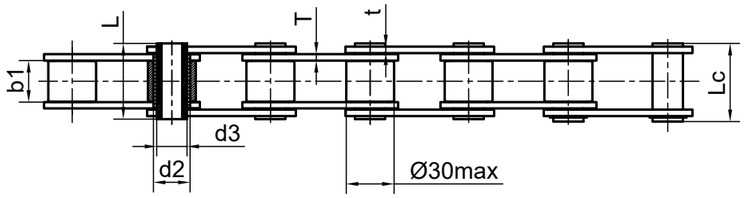


| 征和链号 CHOHO Chain No. | 节距 | 内节内宽 | 销轴外径 | 销轴内径 | 滚子外径 | 销轴长度 | 链板尺寸 | | | 抗拉强度 | 平均抗拉强度 | 每米长重 |
|---|---|---|---|---|---|---|---|---|---|---|---|---|
| | P | b1 min | d2 max | d3 min | d4 max | L max | h2 | T | t | Q min | $Q_0$ | q |
| | mm | mm | mm | mm | mm | mm | mm | mm | mm | kN | kN | kg/m |
| P62.5HP | 62.50 | 26.00 | 19.00 | 12.70 | 30.00 | 47.40 | 30.80 | 4.00 | 4.00 | 75.00 | 95.0 | 4.32 |

# 地膜回收机链 Plastic Film Recycling Machinery Chains





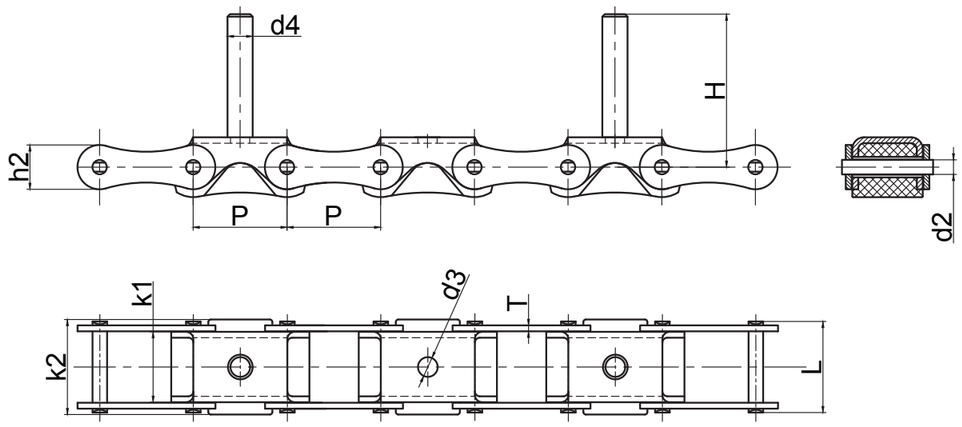


| 征和链号 CHOHO Chain No. | P | h2 | T | H max | k1 max | k2 max | L max | d2 max | d3 max | d4 max |
|---|---|---|---|---|---|---|---|---|---|---|
| | mm | mm | mm | mm | mm | mm | mm | mm | mm | mm |
| 38.1-DM1 | 38.1 | 19.05 | 2.42 | 62.13 | 28.6 | 39 | 37 | 5.94 | 8 | 10 |

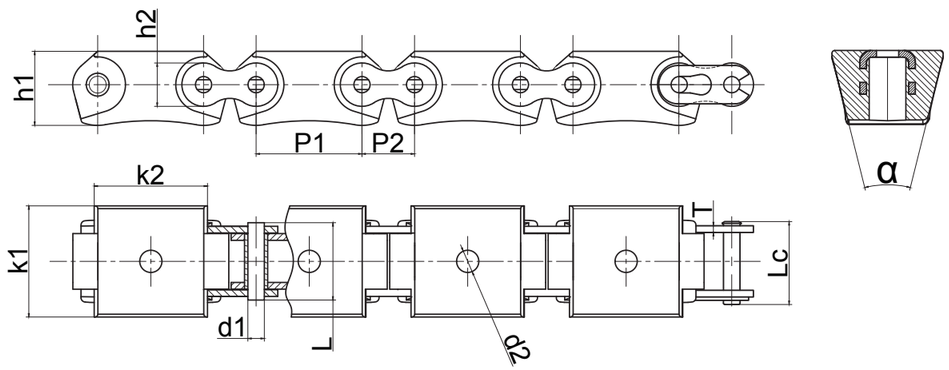


| 征和链号 CHOHO Chain No. | P1 | P2 | h1 max | h2 max | k1 max | k2 max | L max | d2 max | d1 | T | Lc max | α |
|---|---|---|---|---|---|---|---|---|---|---|---|---|
| | mm | mm | mm | mm | mm | mm | mm | mm | mm | mm | mm | / |
| 38.1-DM2 | 38.1 | 19.05 | 27 | 15.6 | 40 | 40.2 | 28.3 | 5.94 | 8.0 | 2.42 | 31.8 | 28° |

# 地膜回收机链 Plastic Film Recycling Machinery Chains





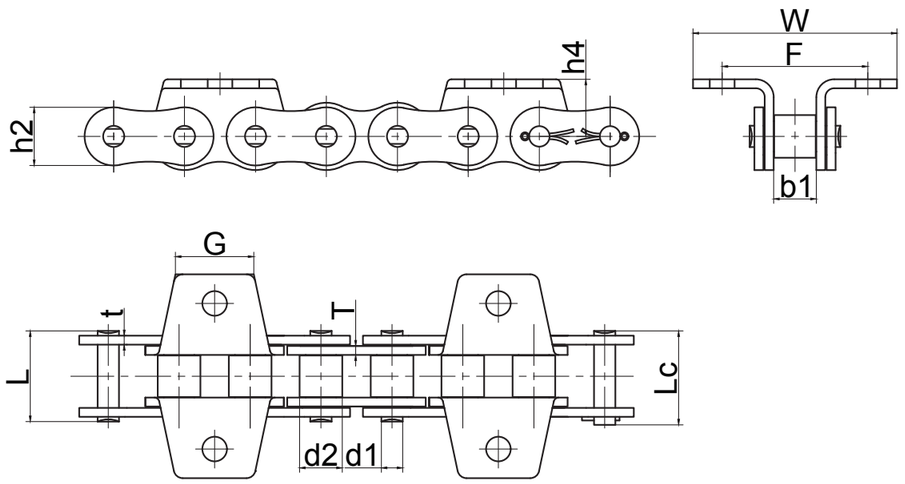


| 征和链号 CHOHO Chain No. | 节距 | 滚子直径 | 内节内宽 | 销轴直径 | 销轴长度 | | 内链板高度 | 内链板厚度 | 外链板厚度 | 附板尺寸 | | | | |
|---|---|---|---|---|---|---|---|---|---|---|---|---|---|---|
| | P | d2 max | b1 min | d1 max | L max | Lc max | h2 max | T | t | F | W | d4 | h4 | G |
| | mm | mm | mm | mm | mm | mm | mm | mm | mm | mm | mm | mm | mm | mm |
| 100WK1 | 31.8 | 19.05 | 18.90 | 9.53 | 40.5 | / | 30.1 | 4 | 4 | 65.00 | 91.0 | 11.1 | 25.5 | 35.0 |

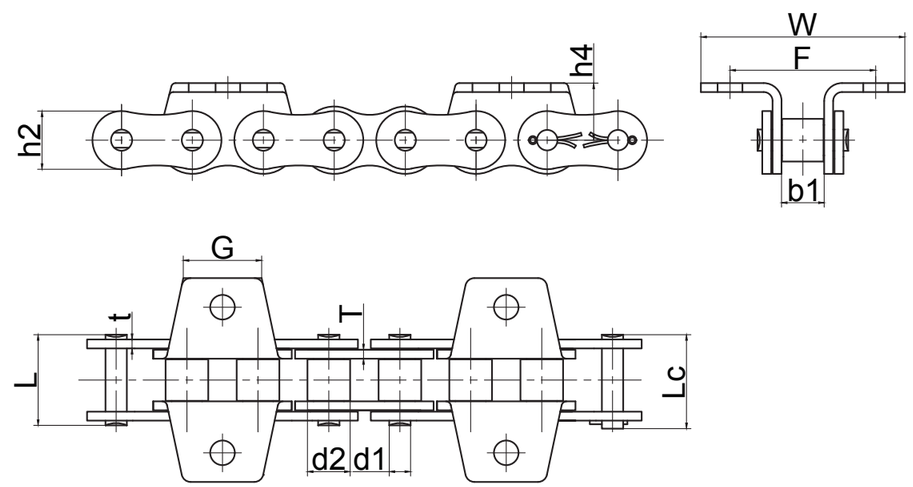


| 征和链号 CHOHO Chain No. | 节距 | 滚子直径 | 内节内宽 | 销轴直径 | 销轴长度 | | 内链板高度 | 内链板厚度 | 外链板厚度 | 附板尺寸 | | | | |
|---|---|---|---|---|---|---|---|---|---|---|---|---|---|---|
| | P | d2 max | b1 min | d1 max | L max | Lc max | h2 max | T | t | F | W | d4 | h4 | G |
| | mm | mm | mm | mm | mm | mm | mm | mm | mm | mm | mm | mm | mm | mm |
| 120WK1 | 38.1 | 22.2 | 25.3 | 11.1 | 54.2 | / | 36.1 | 4.8 | 4.8 | 64 | 91 | 11.1 | 25.5 | 35 |

# 短节距附板链 Short Pitch Attachment Chains





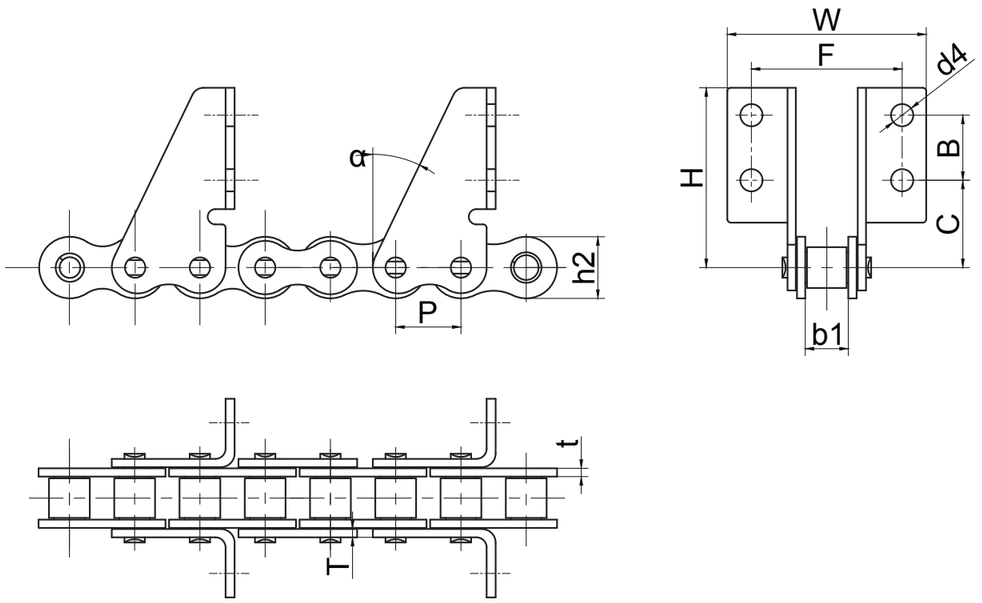


| 征和链号 CHOHO Chain No. | P | b1 | h2 | t | T | F | W | B | C | H | d4 | α |
|---|---|---|---|---|---|---|---|---|---|---|---|---|
| | mm | mm | mm | mm | mm | mm | mm | mm | mm | mm | mm | / |
| 12AF4 | 19.05 | 12.57 | 18.00 | 2.42 | 2.42 | 38.00 | 53.00 | 23.00 | 20.80 | 52.00 | 6.5 | 26° |
| 12ASD | 19.05 | 12.57 | 18.00 | 2.42 | 2.42 | 44.00 | 58.00 | 19.00 | 25.50 | 52.50 | 7.0 | 26° |

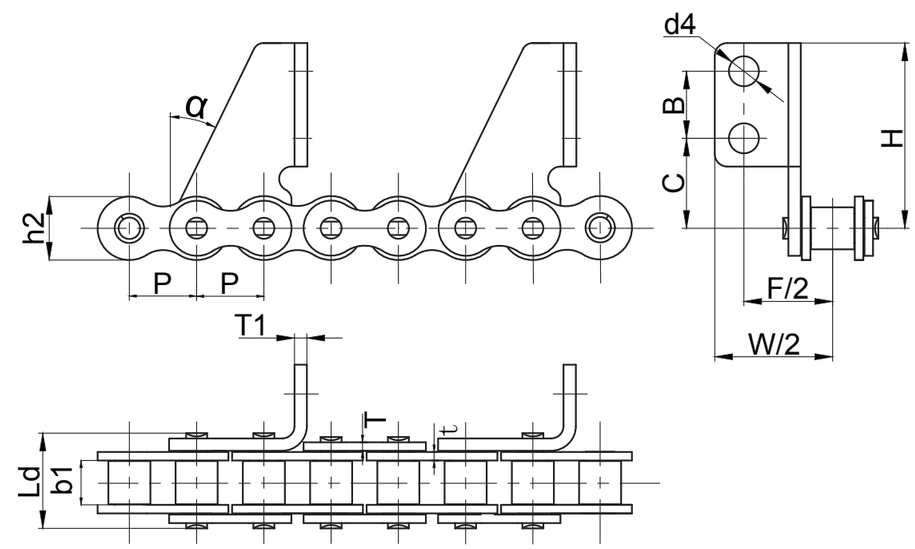


| 征和链号 CHOHO Chain No. | P | b1 | h2 | t | T | T1 | Ld | F/2 | W/2 | B | C | H | d4 | α |
|---|---|---|---|---|---|---|---|---|---|---|---|---|---|---|
| | mm | mm | mm | mm | mm | mm | mm | mm | mm | mm | mm | mm | mm | / |
| 12ASDH | 19.05 | 12.57 | 18.00 | 2.42 | 2.42 | 3.5 | 27 | 25.00 | 33.25 | 19.00 | 25.50 | 52.50 | 8.5 | 26° |
| 12ASDHW | 19.05 | 12.57 | 18.00 | 2.42 | 2.42 | 3.5 | 27 | 12.70 | 19.70 | 23.00 | 21.50 | 52.50 | 8.5 | 26° |

# 短节距附板链 Short Pitch Attachment Chains





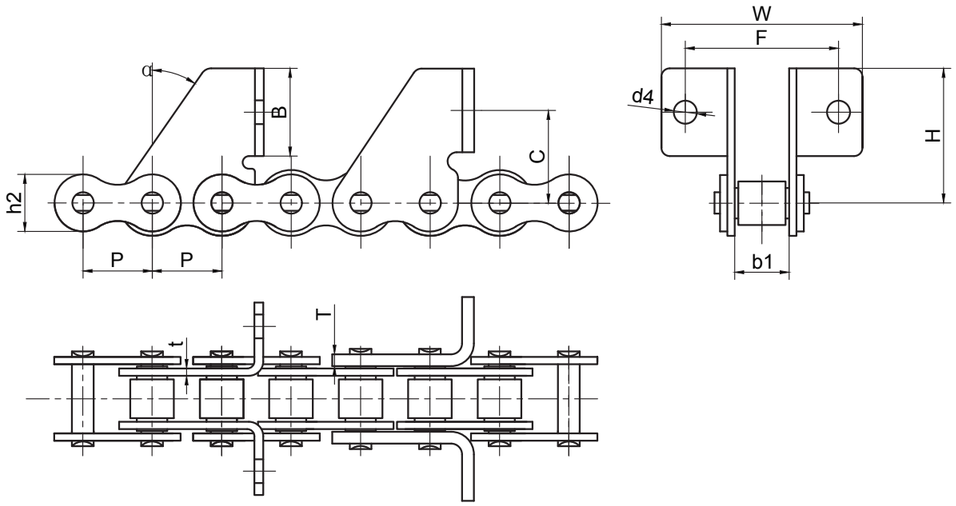


| 征和链号 CHOHO Chain No. | P | b1 | h2 | t | T | F | W | C | H | d4 | α | B |
|---|---|---|---|---|---|---|---|---|---|---|---|---|
| | mm | mm | mm | mm | mm | mm | mm | mm | mm | mm | / | mm |
| 12AF5 | 19.05 | 12.57 | 18.00 | 2.42 | 2.42 | 44.00 | 56.00 | 25.5 | 37.00 | 7.00 | 36° | 23.00 |
| 12AF5H | 19.05 | 12.57 | 18.00 | 2.42 | 3.20 | 44.00 | 56.00 | 25.5 | 37.00 | 7.00 | 34° | 23.00 |
| 12AF6 | 19.05 | 12.57 | 18.00 | 2.42 | 2.42 | 42.00 | 60.00 | 24.00 | 33.00 | 8.00 | 25° | 18.50 |



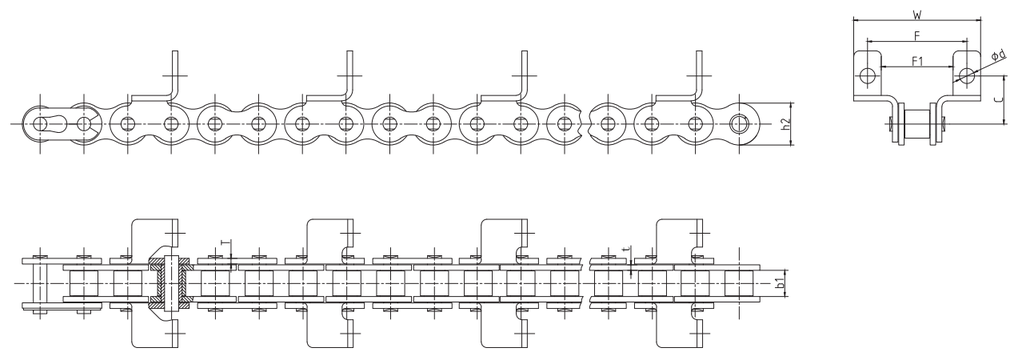


| 征和链号 CHOHO Chain No. | P | b1 | h2 | t | T | F | F1/W | C | H | d |
|---|---|---|---|---|---|---|---|---|---|---|
| | mm | mm | mm | mm | mm | mm | mm | mm | mm | mm |
| 50KV1 | 15.875 | 9.4 | 15.09 | 2.0 | 2.0 | 36.0 | 36/46 | 17.3 | 37.0 | 5.5 |

# 短节距附板链 Short Pitch Attachment Chains

CHOHO



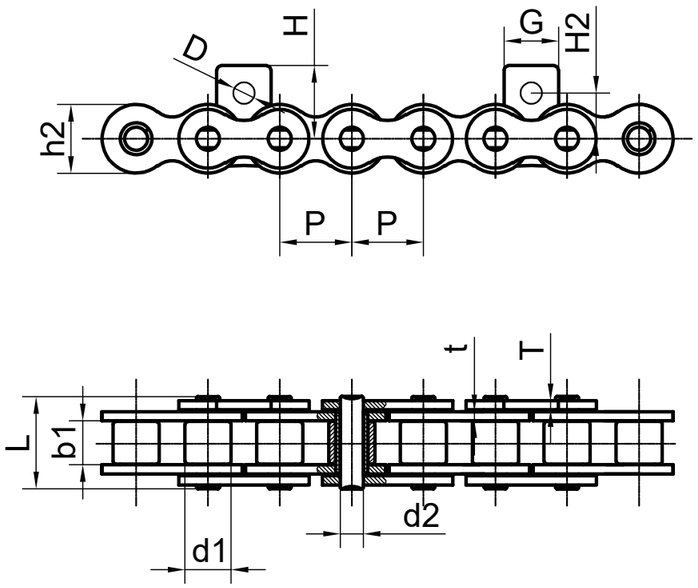


| 征和链号 CHOHO Chain No. | 节距 | 滚子直径 | 销轴直径 | 内节内宽 | 销轴长度 | 头宽 | 链板尺寸 | | 附板尺寸 | | | |
|---|---|---|---|---|---|---|---|---|---|---|---|---|
| | P | d1 max | d2 max | b1 min | L max | h2 | t | T | H | H2 | D | G |
| | mm | mm | mm | mm | mm | mm | mm | mm | mm | mm | mm | mm |
| 50SA1V2 | 15.875 | 10.16 | 5.09 | 9.5 | 20.4 | 15.05 | 2.00 | 2.0 | 16.0 | 10.0 | 4.8 | 12.0 |

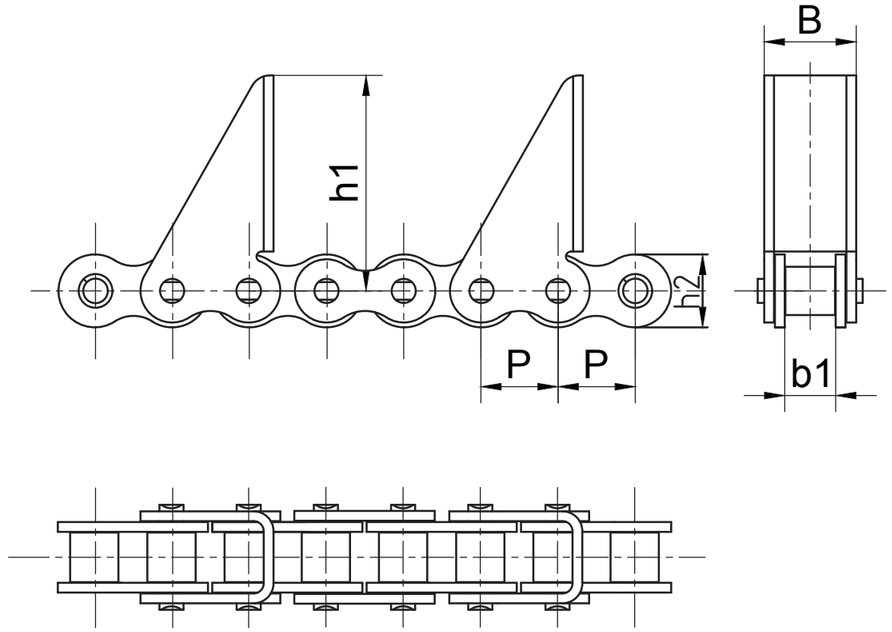


| 征和链号 CHOHO Chain No. | P | b1 min | h2 max | b | h1 |
|---|---|---|---|---|---|
| | mm | mm | mm | mm | mm |
| 12A-CPEF5 | 19.05 | 12.57 | 18.00 | 22.7 | 53.2 |

# 短节距附板链 Short Pitch Attachment Chains





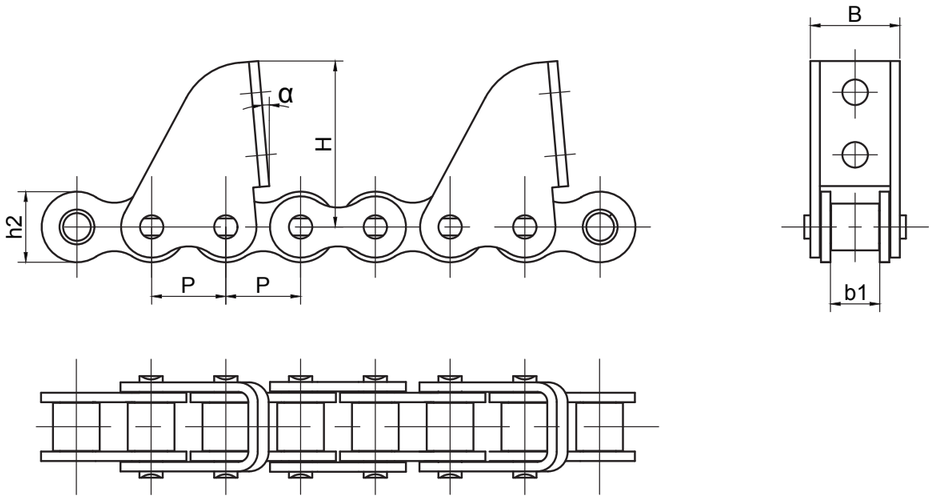


| 征和链号 CHOHO Chain No. | P | b1 min | h2 max | B | H | α |
|---|---|---|---|---|---|---|
| | mm | mm | mm | mm | mm | / |
| 12A-CPEF6 | 19.05 | 12.57 | 18.00 | 22.7 | 42.3 | 5° |

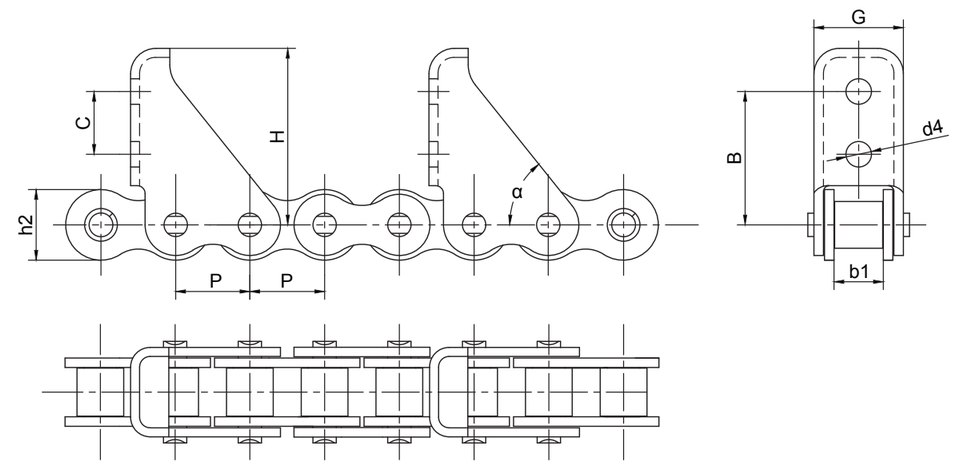


| 征和链号 CHOHO Chain No. | P | b1 min | h2 max | B | H | α | C | G | d4 |
|---|---|---|---|---|---|---|---|---|---|
| | mm | mm | mm | mm | mm | / | mm | mm | mm |
| 12A-CPEF7 | 19.05 | 12.57 | 18.00 | 34.0 | 45.0 | 51.3 | 16.0 | 22.8 | 6.5 |

# 短节距附板链 Short Pitch Attachment Chains





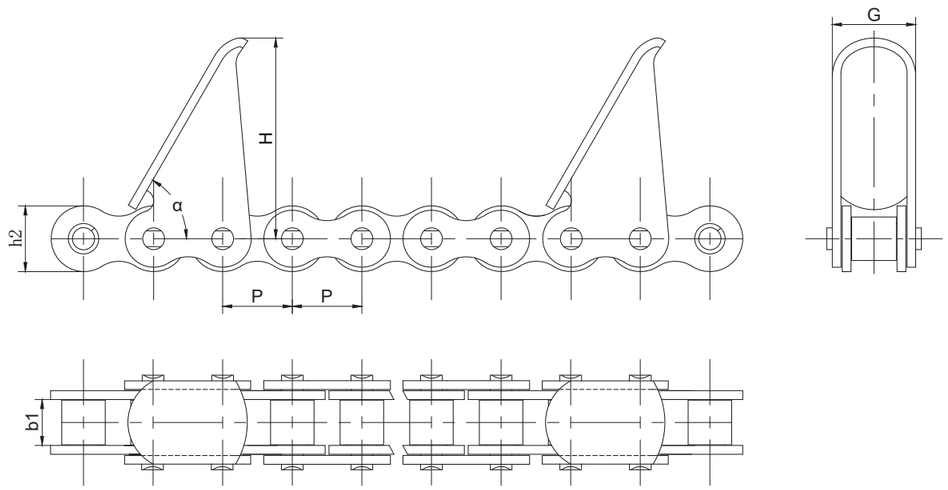


| 征和链号 CHOHO Chain No. | P | b1 min | h2 max | H | α | G |
|---|---|---|---|---|---|---|
| | mm | mm | mm | mm | / | mm |
| 12A-CPEF8 | 19.05 | 12.57 | 18.00 | 55.0 | 60° | 22.8 |
| 12A-CPEF10 | 19.05 | 12.57 | 18.00 | 53.0 | 60° | 22.8 |

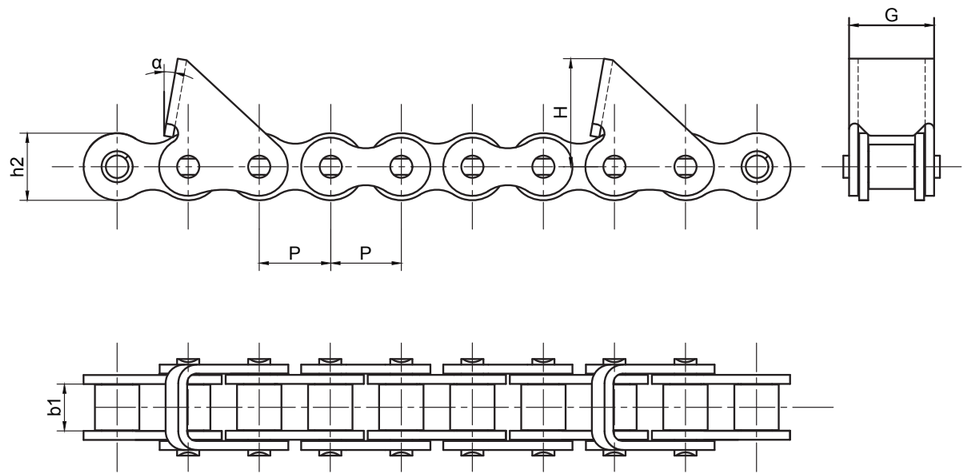


| 征和链号 CHOHO Chain No. | P | b1 min | h2 max | H | α | G |
|---|---|---|---|---|---|---|
| | mm | mm | mm | mm | / | mm |
| 12A-CPEF9 | 19.05 | 12.57 | 18.00 | 29.0 | 10° | 22.8 |

# 短节距附板链 Short Pitch Attachment Chains

CHOHO



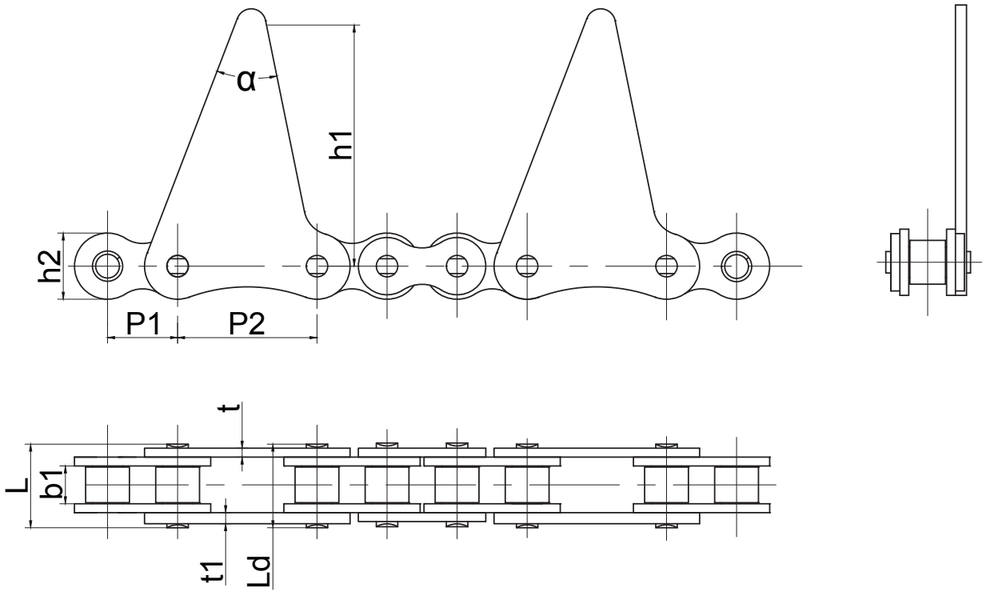


| 征和链号 CHOHO Chain No. | P1 | P2 | L | Ld | b1 min | h2 max | t | t1 | h1 | α |
|---|---|---|---|---|---|---|---|---|---|---|
| | mm | mm | mm | mm | mm | mm | mm | mm | mm | / |
| 12A-FC | 19.05 | 37.51 | 25.9 | 26.5 | 12.57 | 18.00 | 2.42 | 3 | 70.0 | 32.5° |

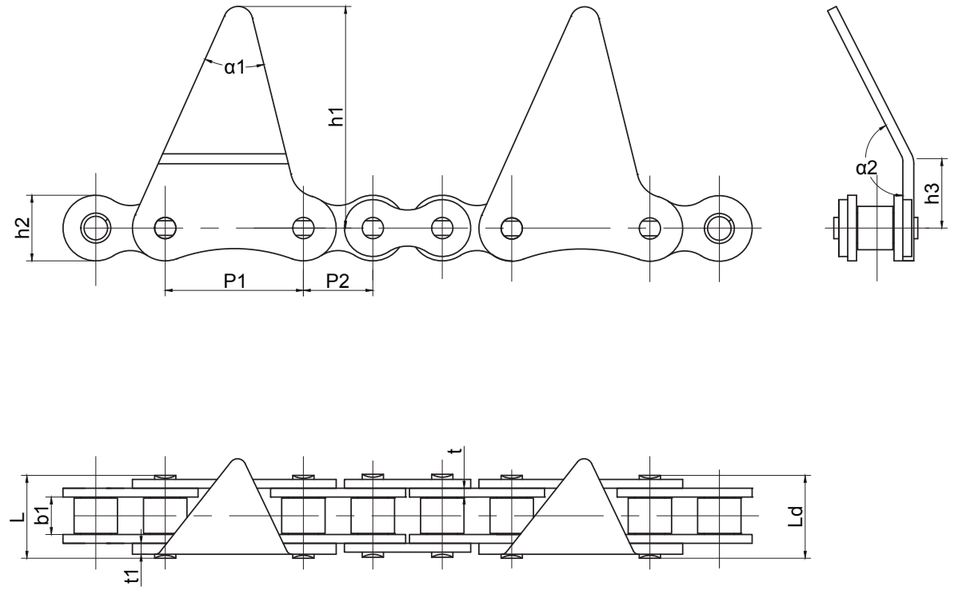


| 征和链号 CHOHO Chain No. | P1 | P2 | L | Ld | b1 min | t | t1 | h1 | h2 max | h3 | α1 | α2 |
|---|---|---|---|---|---|---|---|---|---|---|---|---|
| | mm | mm | mm | mm | mm | mm | mm | mm | mm | mm | / | / |
| 12A-BC | 19.05 | 37.51 | 25.9 | 26.5 | 12.57 | 2.42 | 3 | 64.0 | 18.00 | 18.4 | 32.5° | 153° |

GS38 链条及附件 GS38 Chain and Accessories
S 型钢制农机链及附件 S Type Steel Agricultural Chains and Accessories
A 型钢制农机链及附件 A Type Steel Agricultural Chains and Accessories
C/CA 型钢制农机链及附件 C/CA Type Steel Agricultural Chains and Accessories
水稻收割机链 Rice harvester Chains
夹持链 Clamping Chains
其他农机链及附件 Other Agricultural Chains and Accessories
传动链 Driving Chains

# 短节距附板链 Short Pitch Attachment Chains





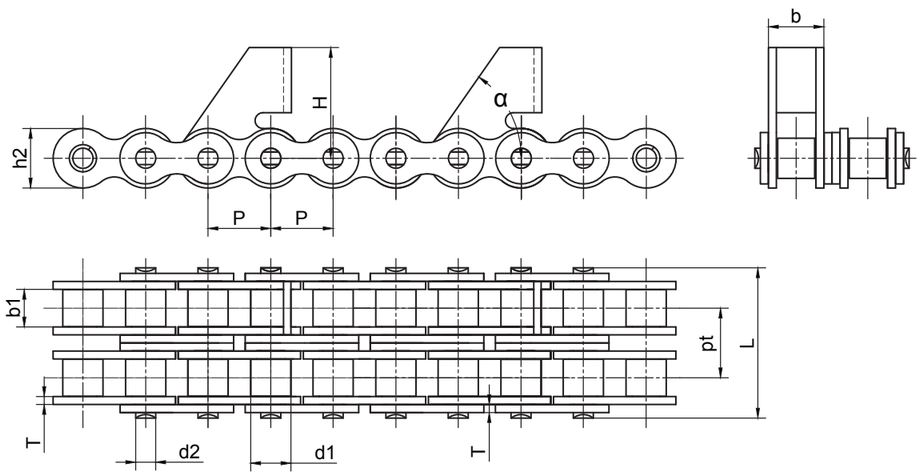


| 征和链号 CHOHO Chain No. | 节距 | 滚子直径 | 销轴直径 | 内节内宽 | 销轴长度 | 排距 | 链板尺寸 | | 附板尺寸 | | | 抗拉强度 |
|---|---|---|---|---|---|---|---|---|---|---|---|---|
| | P | d1 max | d2 max | b1 min | L max | pt | h2 max | T | b | H | α | Q min |
| | mm | mm | mm | mm | mm | mm | mm | mm | mm | mm | / | kN |
| 50-2F1 | 15.875 | 10.16 | 5.09 | 9.5 | 39 | 18.11 | 15.05 | 2.0 | 14.0 | 28.0 | 55° | 44.4 |



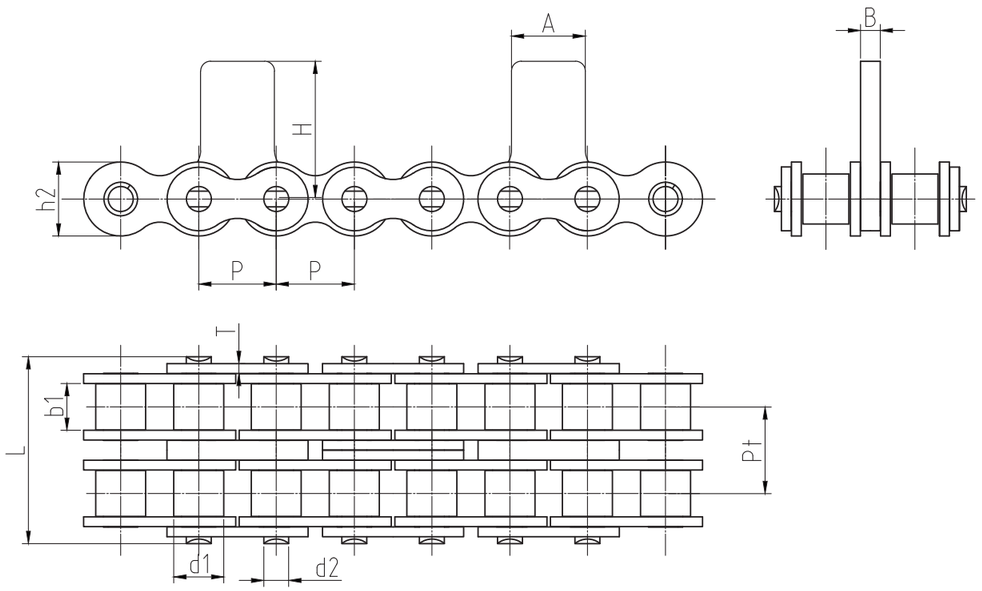


| 征和链号 CHOHO Chain No. | 节距 | 滚子直径 | 销轴直径 | 内节内宽 | 销轴长度 | 排距 | 链板尺寸 | | 附板尺寸 | | | 抗拉强度 | 平均抗拉强度 |
|---|---|---|---|---|---|---|---|---|---|---|---|---|---|
| | P | d1 max | d2 max | b1 min | L max | pt | h2 max | T | H | A | B | Q min | $Q_0$ |
| | mm | mm | mm | mm | mm | mm | mm | mm | mm | mm | mm | kN | kN |
| 50-2SKH | 15.875 | 10.16 | 5.09 | 9.5 | 39 | 18.11 | 15.05 | 2.0 | 28.0 | 15.0 | 4.0 | 44.4 | 58 |
| 50-HDS-2-SKH | 15.875 | 10.16 | 5.09 | 9.4 | 38.8 | 18.11 | 15.05 | 2.0 | 28.0 | 15.0 | 4.0 | 56.9 | 60.8 |
| 50HA-2-SKH | 15.875 | 10.14 | 5.09 | 9.4 | 38.8 | 18.11 | 15.05 | 2.0 | 28.0 | 15.0 | 4.0 | 56.9 | 60.8 |
| 60-HDS-2SKH | 19.050 | 11.91 | 5.94 | 12.6 | 49 | 22.78 | 18.10 | 2.4 | 26.0 | 15.0 | 4.8 | 62.6 | 70 |

# 短节距附板链 Short Pitch Attachment Chains





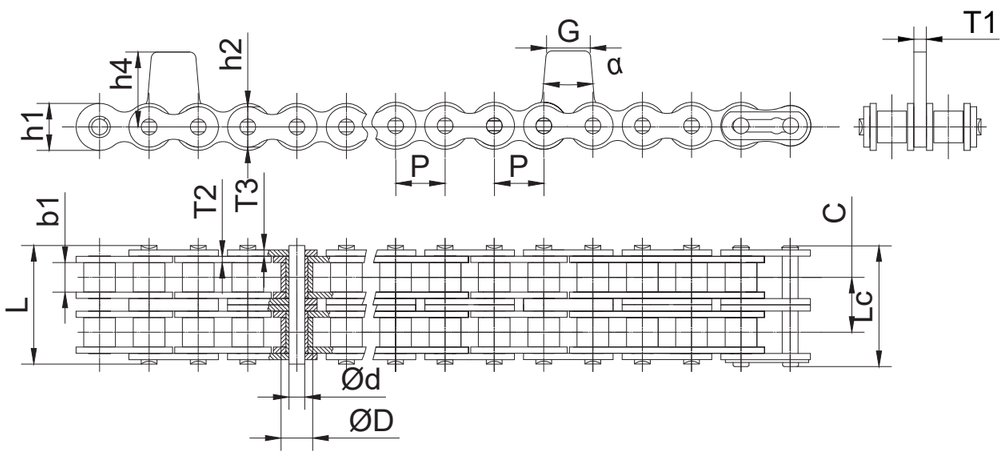


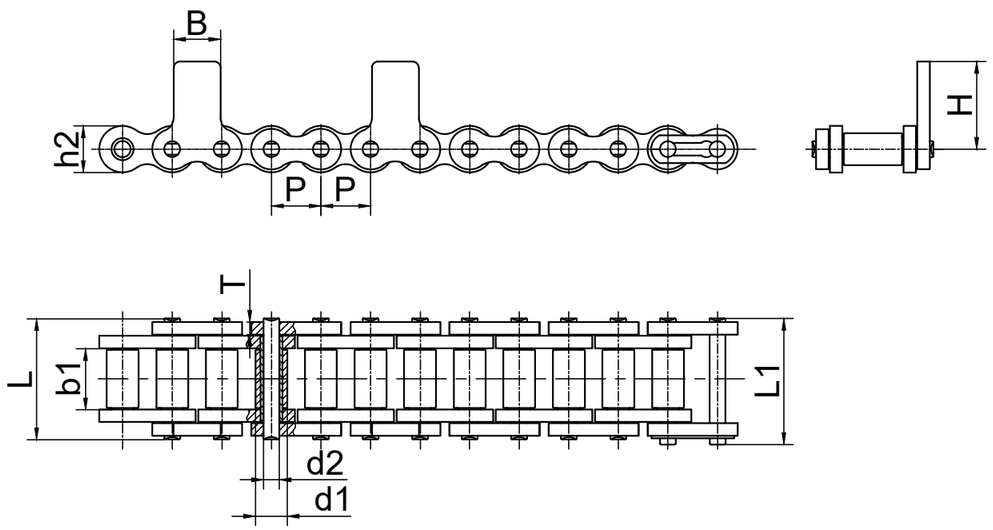


| 征和链号 CHOHO Chain No. | 节距 | 滚子直径 | 销轴直径 | 内节内宽 | 销轴长度 | | 链板尺寸 | | | | 附板尺寸 | | | | 抗拉强度 |
|---|---|---|---|---|---|---|---|---|---|---|---|---|---|---|---|
| | P | d1 max | d2 max | b1 min | L max | Lc max | h1 max | h2 max | T1 | T2/T3 | h4 | G | α | C | Q min |
| | mm | mm | mm | mm | mm | mm | mm | mm | mm | mm | mm | mm | mm | mm | kN |
| 50-HDS-SKHV1 | 15.875 | 10.2 | 5.09 | 9.40 | 38.8 | 40.3 | 15.09 | 13.0 | 4.0 | 2.0 | 24.0 | 14 | 10° | 18.1 | 54.8 |

| 征和链号 CHOHO Chain No. | P | d1 max | d2 max | b1 min | L max | L1 max | h2 max | T | B | H |
|---|---|---|---|---|---|---|---|---|---|---|
| | mm | mm | mm | mm | mm | mm | mm | mm | mm | mm |
| 50HHV1-SKH | 15.875 | 10.16 | 5..09 | 19.00 | 39 | 40 | 15.00 | 4.00 | 15.00 | 28.00 |

# 短节距附板链 Short Pitch Attachment Chains





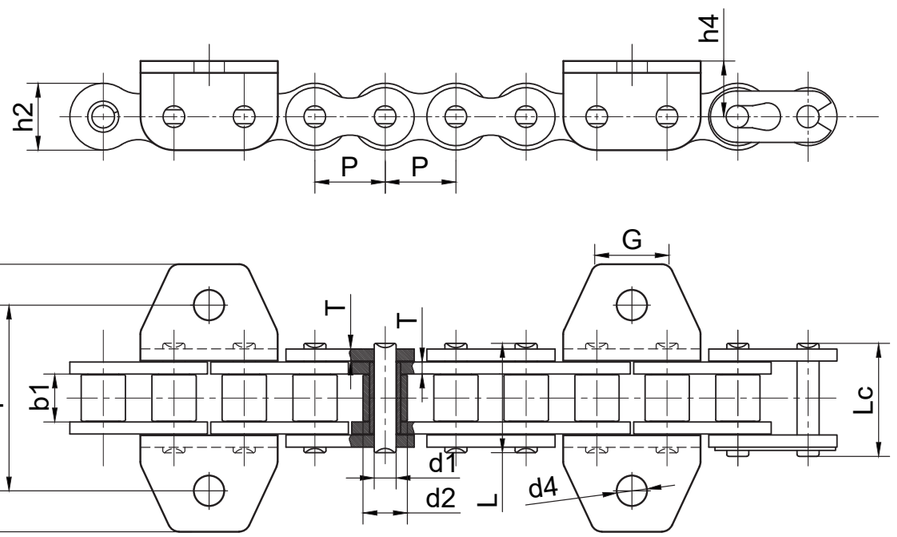


| 征和链号 CHOHO Chain No. | 节距 | 滚子直径 | 销轴直径 | 内节内宽 | 销轴长度 | | 链板尺寸 | | 附板尺寸 | | | W | F | 抗拉强度 |
|---|---|---|---|---|---|---|---|---|---|---|---|---|---|---|
| | P | d1 max | d2 max | b1 min | L max | Lc max | h2 max | T | h4 | G | d4 | | | Q min |
| | mm | mm | mm | mm | mm | mm | mm | mm | mm | mm | mm | mm | mm | kN |
| 60HWK1V1 | 19.05 | 11.91 | 5.94 | 12.57 | 29.7 | 30.90 | 18.00 | 3.2 | 15.0 | 20.0 | 4.0 | 72 | 50 | 31.8 |

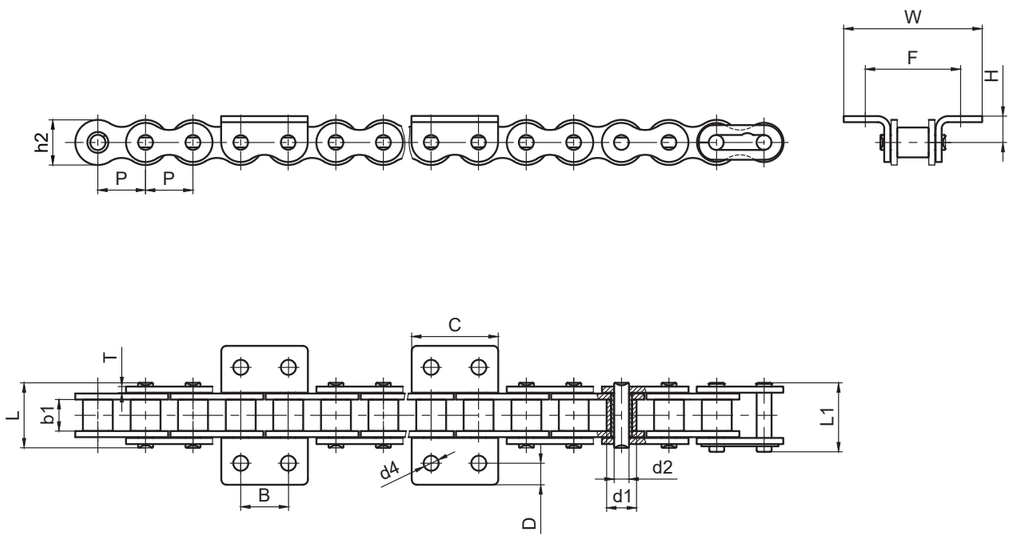


| 征和链号 CHOHO Chain No. | P | d1 max | d2 max | b1 min | L max | L1 max | h2 max | T | W | F | B | C | D | d4 | H |
|---|---|---|---|---|---|---|---|---|---|---|---|---|---|---|---|
| | mm | mm | mm | mm | mm | mm | mm | mm | mm | mm | mm | mm | mm | mm | mm |
| 60-HDS-WK2V1 | 19.05 | 11.91 | 5.94 | 12.57 | 25.9 | 27.5 | 18.00 | 2.42 | 55.20 | 38.00 | 19.00 | 34.50 | 8.60 | 6.00 | 10.50 |

# 磨刀链条 Sharpening Chains

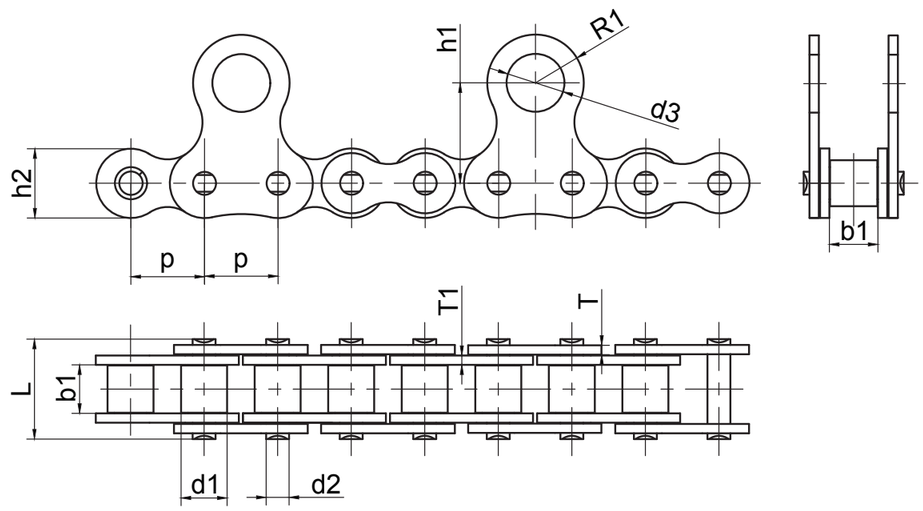


| 征和链号 CHOHO Chain No. | 节距 | 滚子直径 | 销轴直径 | 内节内宽 | 销轴长度 | 链板尺寸 | | | 附板尺寸 | | |
|---|---|---|---|---|---|---|---|---|---|---|---|
| | P | d1 max | d2 max | b1 min | L max | h2 max | T1 | T | h1 | R1 | d3 |
| | mm | mm | mm | mm | mm | mm | mm | mm | mm | mm | mm |
| 12AF7 | 19.05 | 11.91 | 5.94 | 12.57 | 25.9 | 18.00 | 2.42 | 3.00 | 26.00 | 12.50 | 15.00 |





# 耦合器链条 Coupler Chains

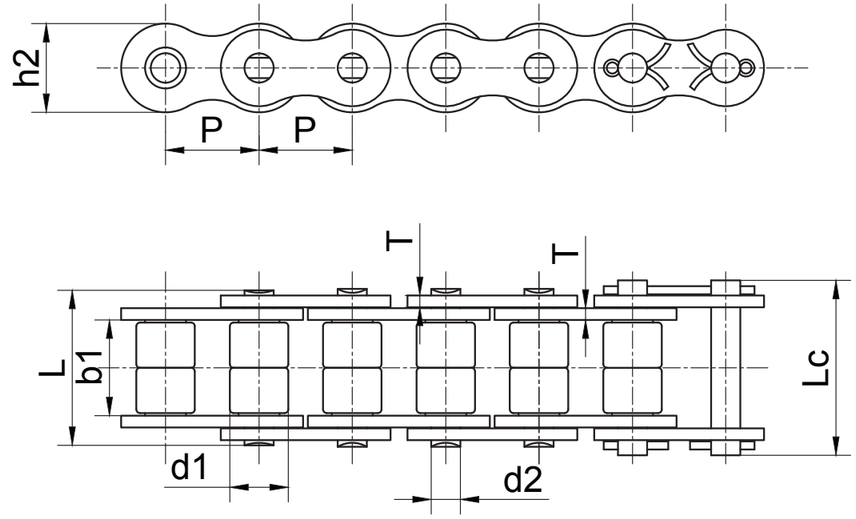


| 征和链号 CHOHO Chain No. | 节距 | 滚子直径 | 内节内宽 | 销轴直径 | 销轴长度 | | 内链板高度 | 链板厚度 | 抗拉强度 | 平均抗拉强度 | 每米单重 |
|---|---|---|---|---|---|---|---|---|---|---|---|
| | P | d1 max | b1 min | d2 max | L max | Lc max | h2 max | T max | Q min | $Q_0$ | q |
| | mm | mm | mm | mm | mm | mm | mm | mm | kN | kN | kg/m |
| 12ALZ | 19.05 | 11.91 | 19.45 | 5.94 | 31.9 | 33.84 | 18.00 | 2.420 | 19 | / | 1.786 |
| 12AHLZ | 19.05 | 11.91 | 19.45 | 5.94 | 35.7 | 38.3 | 18.00 | 3.250 | 31.8 | 42.0 | 2.189 |
| 12AHLZ | 19.05 | 11.91 | 19.45 | 5.94 | 35.7 | 38.3 | 18.00 | 3.250 | 31.8 | 42.0 | 2.189 |
| 16ALZ | 25.40 | 15.88 | 26 | 7.92 | 42.5 | 47.5 | 24.10 | 3.100 | 50 | 70.0 | 4.266 |

# 甜菜收获机链 Beet Harvester Chains



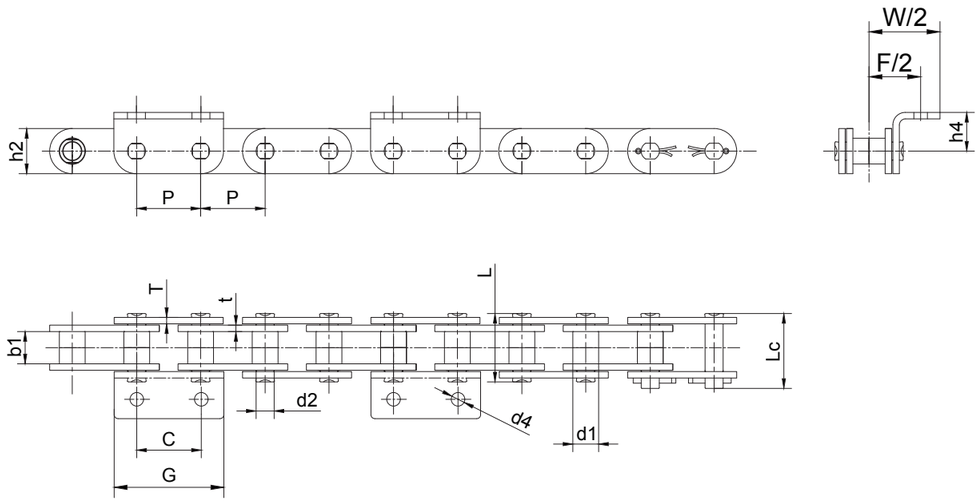


| 征和链号 CHOHO Chain No. | 节距 | 滚子直径 | 销轴直径 | 内节内宽 | 销轴长度 | | | 链板尺寸 | | | 附板尺寸 | | | | | | 抗拉强度 |
|---|---|---|---|---|---|---|---|---|---|---|---|---|---|---|---|---|---|
| | P | d1 max | d2 max | b1 min | L max | Lc max | Ls max | h2 max | T | t | h4 | G | F/2 | W/ | d4 | C | Q min |
| | mm | mm | mm | mm | mm | mm | mm | mm | mm | mm | mm | mm | mm | mm | mm | mm | kN |
| P50V2A1 | 50.0 | 20.0 | 14.0 | 24.90 | 53 | 58 | / | 35.0 | 5.0 | 5.0 | 47.5 | 85 | 40.0 | 55.00 | 10.5 | 50.0 | 90 |





# 旋耕机链 Rotary Tiller chains



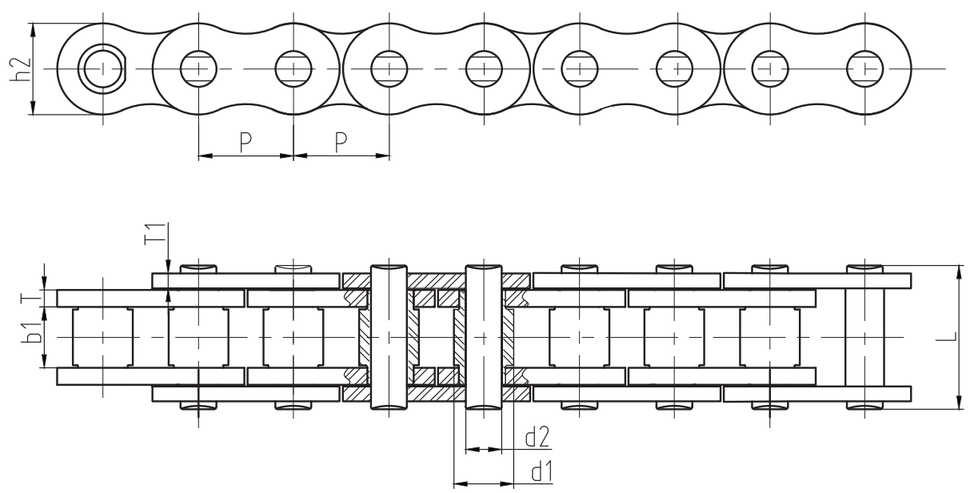


| 征和链号 CHOHO Chain No. | 节距 | 滚子直径 | 内节内宽 | 销轴直径 | 销轴长度 | | 链板尺寸 | | | 抗拉强度 | 平均抗拉强度 | 每米单重 |
|---|---|---|---|---|---|---|---|---|---|---|---|---|
| | P | d1 max | b1 min | d2 max | L max | Lc max | h2 max | T max | T1 max | Q min | $Q_0$ | q |
| | mm | mm | mm | mm | mm | mm | mm | mm | mm | kN | kN | kg/m |
| 85H-1 | 25.40 | 15.88 | 15.90 | 9.43 | 38.3 | / | 24.3 | 4.50 | 4.00 | 95 | 105 | 5.91 |

# 药材收获机链 Medicinal Material Harvester Chains



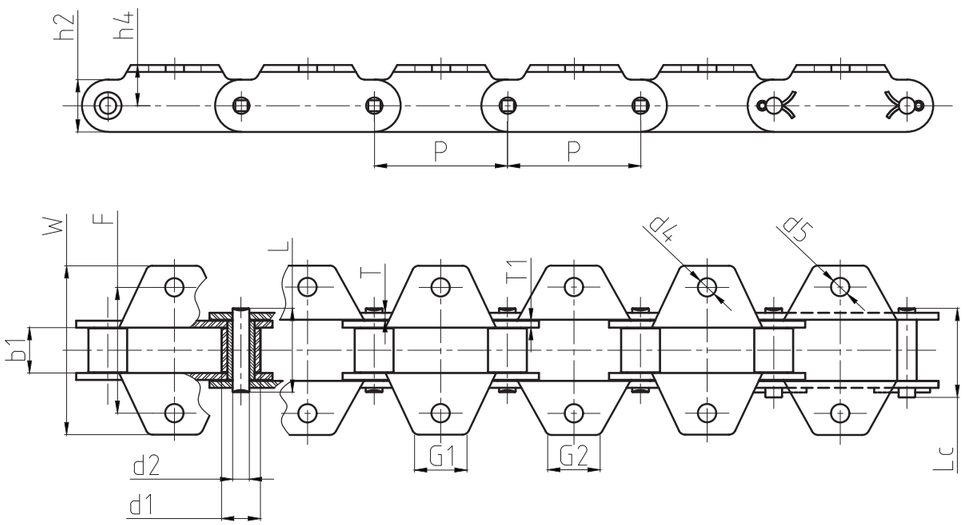


| 征和链号 CHOHO Chain No. | 节距 | 滚子直径 | 内节内宽 | 销轴直径 | 销轴长度 | | 附板尺寸 | | | | | | | | 抗拉强度 | 平均抗拉强度 | 每米单重 |
|---|---|---|---|---|---|---|---|---|---|---|---|---|---|---|---|---|---|
| | P | d1 max | b1 min | d2 max | L max | Lc max | h2 max | h4 max | T max | T1 max | d4 | d5 | G1 | G2 | Q min | $Q_0$ | q |
| | mm | mm | mm | mm | mm | mm | mm | mm | mm | mm | mm | mm | mm | mm | kN | kN | kg/m |
| P76.2F9K1 | 76.20 | 22.23 | 26.00 | 9.43 | 48 | 51.3 | 30.0 | 23.40 | 4.00 | 4.00 | 10.50 | 10.50 | 30.00 | 30.00 | 88.5 | / | 4.73 |





# A系列短节距精密滚子链 Short Pitch Precision Roller Chains (A Series)

## 单排 Simplex

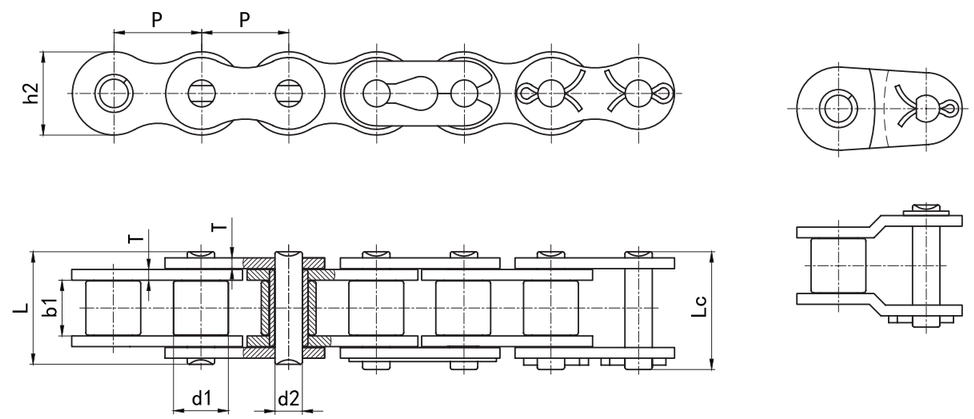


| DIN 链号 | ISO/ ANSI 链号 | 节距 | 滚子直径 | 内节内宽 | 销轴直径 | 销轴长度 | | 内链板高度 | 链板厚度 | 抗拉强度 | 平均抗拉强度 | 每米重量 |
|---|---|---|---|---|---|---|---|---|---|---|---|---|
| | | Pitch | Roller diameter | Width between inner plates | Pin diameter | Pin length | | Inner plate depth | Plate thickness | Ultimate tensile Strength | Average tensile strength | Weight per meter |
| DIN Chain No. | ISO/ ANSI Chain No. | P | d1 max | b1 min | d2 max | L max | Lc max | h2 max | T max | Q min | $Q_0$ | q |
| | | mm | mm | mm | mm | mm | mm | mm | mm | KN | KN | kg/m |
| 085-1 | 41 | 12.700 | 7.77 | 6.25 | 3.60 | 13.7 | 15.5 | 9.91 | 1.20 | 6.7 | 12.3 | 0.40 |
| 08A-1 | 40 | 12.700 | 7.92 | 7.85 | 3.98 | 16.7 | 18.3 | 12.07 | 1.50 | 13.9 | 17.9 | 0.65 |
| 10A-1 | 50 | 15.875 | 10.16 | 9.40 | 5.09 | 20.7 | 23.8 | 15.09 | 2.00 | 21.8 | 29.3 | 1.03 |
| 12A-1 | 60 | 19.050 | 11.91 | 12.57 | 5.96 | 26.2 | 28.3 | 18.10 | 2.42 | 31.3 | 42.0 | 1.51 |
| 16A-1 | 80 | 25.400 | 15.88 | 15.75 | 7.94 | 32.9 | 36.4 | 24.13 | 3.10 | 55.6 | 72.3 | 2.61 |
| 20A-1 | 100 | 31.750 | 19.05 | 18.90 | 9.54 | 40.8 | 44.1 | 30.17 | 4.00 | 87.0 | 110.5 | 3.90 |
| 24A-1 | 120 | 38.100 | 22.23 | 25.22 | 11.11 | 50.8 | 54.7 | 36.20 | 4.80 | 125.0 | 157.0 | 5.60 |
| 28A-1 | 140 | 44.450 | 25.40 | 25.22 | 12.71 | 54.7 | 61.0 | 42.23 | 5.60 | 170.0 | 213.2 | 7.52 |
| 32A-1 | 160 | 50.800 | 28.58 | 31.55 | 14.29 | 65.5 | 70.0 | 48.26 | 6.40 | 223.0 | 279.0 | 10.08 |
| 40A-1 | 200 | 63.500 | 39.68 | 37.85 | 19.85 | 80.3 | 87.7 | 60.33 | 8.00 | 347.0 | 429.0 | 16.15 |

# A系列短节距精密滚子链 Short Pitch Precision Roller Chains (A Series)

CHOHO



## 双排 Duplex

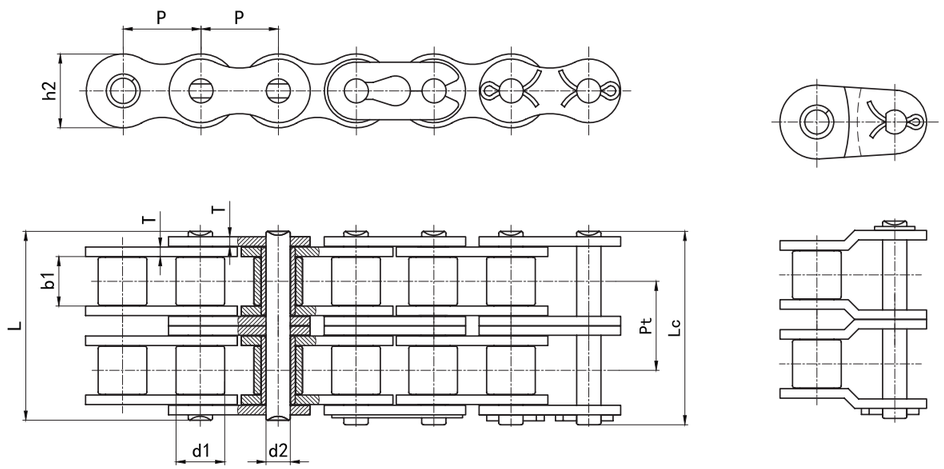


| DIN 链号 | ISO/ ANSI 链号 | 节距 | 滚子直径 | 内节内宽 | 销轴直径 | 销轴长度 | | 内链板高度 | 链板厚度 | 排距 | 抗拉强度 | 平均抗拉强度 | 每米重量 |
|---|---|---|---|---|---|---|---|---|---|---|---|---|---|
| | | Pitch | Roller diameter | Width between inner plates | Pin diameter | Pin length | | Inner plate depth | Plate thickness | Transverse pitch | Ultimate tensile strength | Average tensile strength | Weight per meter |
| DIN Chain No. | ISO/ ANSI Chain No. | P | d1 max | b1 min | d2 max | L max | Lc max | h2 max | T max | Pt | Q min | $Q_0$ | q |
| | | mm | mm | mm | mm | mm | mm | mm | mm | mm | KN | KN | kg/m |
| 08A-2 | 40-2 | 12.700 | 7.92 | 7.85 | 3.98 | 31.2 | 33.3 | 12.07 | 1.50 | 14.38 | 27.8 | 35.7 | 1.15 |
| 10A-2 | 50-2 | 15.875 | 10.16 | 9.40 | 5.09 | 39.1 | 40.6 | 15.09 | 2.00 | 18.11 | 43.6 | 58.0 | 2.00 |
| 12A-2 | 60-2 | 19.050 | 11.91 | 12.57 | 5.96 | 49.1 | 50.8 | 18.10 | 2.42 | 22.78 | 62.6 | 82.4 | 2.94 |
| 16A-2 | 80-2 | 25.400 | 15.88 | 15.75 | 7.94 | 62.1 | 65.5 | 24.13 | 3.10 | 29.29 | 111.2 | 142.0 | 5.45 |
| 20A-2 | 100-2 | 31.750 | 19.05 | 18.90 | 9.54 | 76.6 | 80.5 | 30.17 | 4.00 | 35.76 | 174.0 | 219.9 | 7.80 |
| 24A-2 | 120-2 | 38.100 | 22.23 | 25.22 | 11.11 | 96.3 | 100.2 | 36.20 | 4.80 | 45.44 | 250.0 | 314.8 | 11.63 |
| 28A-2 | 140-2 | 44.450 | 25.40 | 25.22 | 12.71 | 103.6 | 110.1 | 42.23 | 5.60 | 48.87 | 340.0 | 427.9 | 15.21 |
| 32A-2 | 160-2 | 50.800 | 28.58 | 31.55 | 14.29 | 124.1 | 128.6 | 48.26 | 6.40 | 58.55 | 446.0 | 561.8 | 20.25 |
| 40A-2 | 200-2 | 63.500 | 39.68 | 37.85 | 19.85 | 151.9 | 159.3 | 60.33 | 8.00 | 71.55 | 694.0 | 875.0 | 32.24 |



## 三排 Triplex

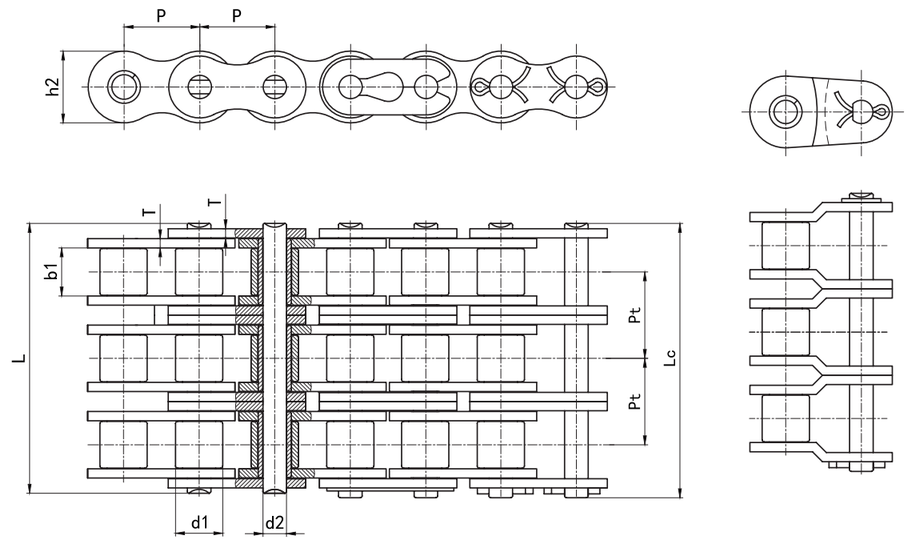


| DIN 链号 | ISO/ ANSI 链号 | 节距 | 滚子直径 | 内节内宽 | 销轴直径 | 销轴长度 | | 内链板高度 | 链板厚度 | 排距 | 抗拉强度 | 平均抗拉强度 | 每米重量 |
|---|---|---|---|---|---|---|---|---|---|---|---|---|---|
| | | Pitch | Roller diameter | Width between inner plates | Pin diameter | Pin length | | Inner plate depth | Plate thickness | Transverse pitch | Ultimate tensile strength | Average tensile strength | Weight per meter |
| DIN Chain No. | ISO/ ANSI Chain No. | P | d1 max | b1 min | d2 max | L max | Lc max | h2 max | T max | Pt | Q min | $Q_0$ | q |
| | | mm | mm | mm | mm | mm | mm | mm | mm | mm | KN | KN | kg/m |
| 08A-3 | 40-3 | 12.700 | 7.92 | 7.85 | 3.98 | 45.5 | 47.1 | 12.07 | 1.50 | 14.38 | 41.7 | 50.0 | 1.90 |
| 10A-3 | 50-3 | 15.875 | 10.16 | 9.40 | 5.09 | 56.9 | 58.3 | 15.09 | 2.00 | 18.11 | 65.4 | 77.8 | 3.05 |
| 12A-3 | 60-3 | 19.050 | 11.91 | 12.57 | 5.96 | 71.8 | 73.6 | 18.10 | 2.42 | 22.78 | 93.9 | 112.0 | 4.54 |
| 16A-3 | 80-3 | 25.400 | 15.88 | 15.75 | 7.94 | 91.8 | 95.1 | 24.13 | 3.10 | 29.29 | 166.8 | 199.0 | 7.89 |
| 20A-3 | 100-3 | 31.750 | 19.05 | 18.90 | 9.54 | 112.1 | 116.7 | 30.17 | 4.00 | 35.76 | 261.0 | 310.0 | 11.80 |
| 24A-3 | 120-3 | 38.100 | 22.23 | 25.22 | 11.11 | 141.3 | 145.2 | 36.20 | 4.80 | 45.44 | 375.0 | 439.0 | 17.53 |
| 28A-3 | 140-3 | 44.450 | 25.40 | 25.22 | 12.71 | 152.0 | 157.9 | 42.23 | 5.60 | 48.87 | 510.0 | 596.0 | 22.20 |
| 32A-3 | 160-3 | 50.800 | 28.58 | 31.55 | 14.29 | 181.8 | 186.3 | 48.26 | 6.40 | 58.55 | 669.0 | 782.0 | 30.12 |
| 40A-3 | 200-3 | 63.500 | 39.68 | 37.85 | 19.85 | 223.5 | 230.9 | 60.33 | 8.00 | 71.55 | 1041.0 | 1220.0 | 49.03 |

# B系列短节距精密滚子链 Short Pitch Precision Roller Chains (B Series)

CHOHO



## 单排 Simplex

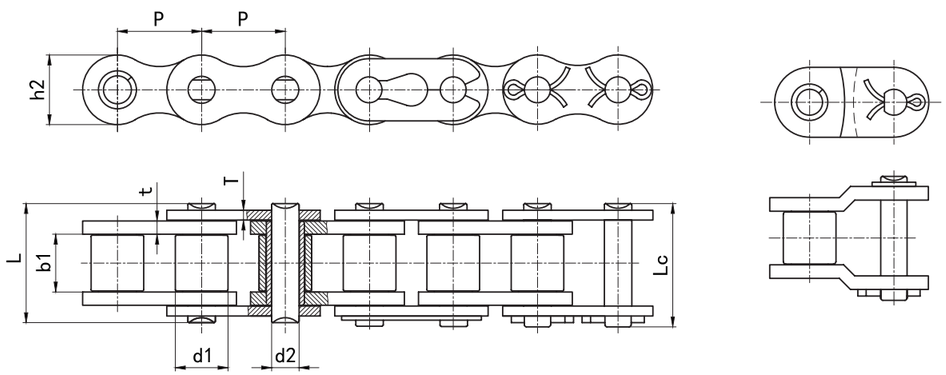


| ISO/DIN 链号 | 节距 | 滚子直径 | 内节内宽 | 销轴直径 | 销轴长度 | | 内链板高度 | 链板厚度 | 抗拉强度 | 平均抗拉强度 | 每米重量 |
|---|---|---|---|---|---|---|---|---|---|---|---|
| | Pitch | Roller diameter | Width between inner plates | Pin diameter | Pin length | | Inner plate depth | Plate thickness | Ultimate tensile strength | Average tensile strength | Weight per meter |
| ISO/DIN Chain No. | P | d1 max | b1 min | d2 max | L max | Lc max | h2 max | t/T max | Q min | $Q_0$ | q |
| | mm | mm | mm | mm | mm | mm | mm | mm | kN | kN | kg/m |
| 08B-1 | 12.700 | 8.51 | 7.75 | 4.45 | 17.0 | 19.2 | 11.81 | 1.60 | 17.8 | 19.8 | 0.71 |
| 10B-1 | 15.875 | 10.16 | 9.65 | 5.08 | 19.6 | 22.3 | 14.73 | 1.70 | 22.2 | 27.5 | 0.93 |
| 12B-1 | 19.050 | 12.07 | 11.68 | 5.72 | 22.6 | 25.0 | 16.13 | 1.85 | 28.9 | 32.3 | 1.13 |
| 16B-1 | 25.400 | 15.88 | 17.02 | 8.28 | 36.1 | 39.2 | 21.08 | 4.0/3.0 | 60.0 | 72.5 | 2.72 |
| 20B-1 | 31.750 | 19.05 | 19.56 | 10.19 | 41.4 | 46.5 | 26.42 | 4.5/3.5 | 95.0 | 106.0 | 3.72 |
| 24B-1 | 38.100 | 25.40 | 25.40 | 14.63 | 53.4 | 59.9 | 33.40 | 6.0/4.8 | 160.0 | 178.3 | 7.10 |
| 28B-1 | 44.450 | 27.94 | 30.99 | 15.90 | 65.1 | 71.5 | 37.08 | 7.5/6.0 | 200.0 | 220.0 | 8.50 |
| 32B-1 | 50.800 | 29.21 | 30.99 | 17.81 | 66.8 | 72.5 | 42.29 | 7.0/6.0 | 250.0 | 270.0 | 10.25 |
| 40B-1 | 63.500 | 39.37 | 38.10 | 22.89 | 82.2 | 87.5 | 52.96 | 8.5/8.0 | 355.0 | 392.0 | 16.35 |



## 双排 Duplex

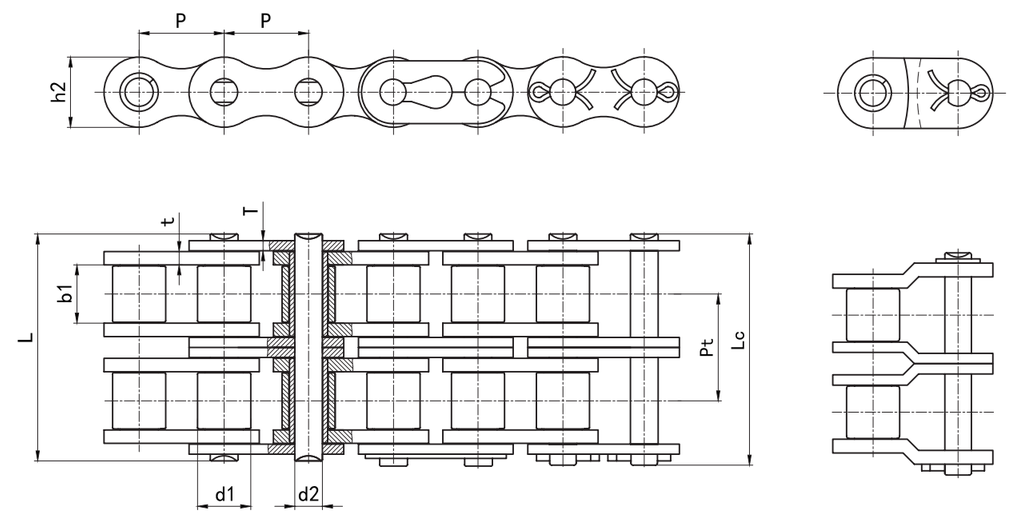


| ISO/DIN 链号 | 节距 | 滚子直径 | 内节内宽 | 销轴直径 | 销轴长度 | | 内链板高度 | 链板厚度 | 排距 | 抗拉强度 | 平均抗拉强度 | 每米重量 |
|---|---|---|---|---|---|---|---|---|---|---|---|---|
| | Pitch | Roller diameter | Width between inner plates | Pin diameter | Pin length | | Inner plate depth | Plate thickness | Transverse pitch | Ultimate tensile strength | Average tensile strength | Weight per meter |
| ISO/DIN Chain No. | P | d1 max | b1 min | d2 max | L max | Lc max | h2 max | t/T max | Pt | Q min | $Q_0$ | q |
| | mm | mm | mm | mm | mm | mm | mm | mm | mm | KN | KN | kg/m |
| 08B-2 | 12.700 | 8.51 | 7.75 | 4.45 | 31.0 | 32.7 | 11.81 | 1.60 | 13.92 | 31.1 | 38.4 | 1.32 |
| 10B-2 | 15.875 | 10.16 | 9.65 | 5.08 | 36.2 | 38.3 | 14.73 | 1.70 | 16.59 | 44.5 | 55.0 | 1.85 |
| 12B-2 | 19.050 | 12.07 | 11.68 | 5.72 | 42.0 | 44.4 | 16.13 | 1.85 | 19.46 | 57.8 | 66.3 | 2.31 |
| 16B-2 | 25.400 | 15.88 | 17.02 | 8.28 | 68.0 | 71.2 | 21.08 | 4.0/3.0 | 31.88 | 106.0 | 133.4 | 5.41 |
| 20B-2 | 31.750 | 19.05 | 19.56 | 10.19 | 77.9 | 83.0 | 26.42 | 4.5/3.5 | 36.45 | 170.0 | 210.0 | 7.21 |
| 24B-2 | 38.100 | 25.40 | 25.40 | 14.63 | 101.8 | 108.5 | 33.40 | 6.0/4.8 | 48.36 | 280.0 | 318.1 | 13.40 |
| 28B-2 | 44.450 | 27.94 | 30.99 | 15.90 | 124.7 | 130.8 | 37.08 | 7.5/6.0 | 59.56 | 360.0 | 430.0 | 16.60 |
| 32B-2 | 50.800 | 29.21 | 30.99 | 17.81 | 125.3 | 131.2 | 42.29 | 7.0/6.0 | 58.55 | 450.0 | 520.0 | 21.00 |
| 40B-2 | 63.500 | 39.37 | 38.10 | 22.89 | 153.7 | 159.2 | 52.96 | 8.5/8.0 | 72.29 | 630.0 | 710.0 | 32.00 |

# A系列加重型滚子链 Heavy Duty Series Roller Chains (A Series)

CHOHO



## 三排 Triplex

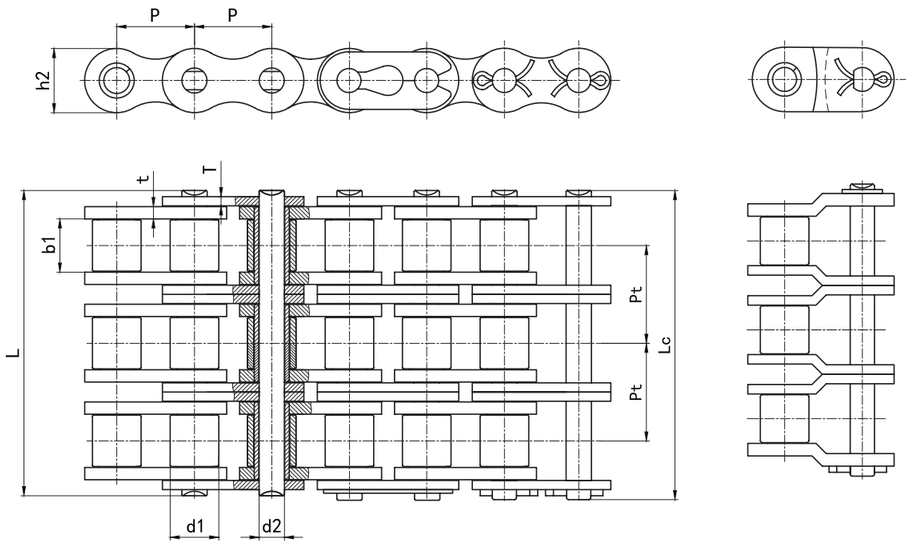


| ISO/DIN 链号 | 节距 | 滚子直径 | 内节内宽 | 销轴直径 | 销轴长度 | | 内链板高度 | 链板厚度 | 排距 | 抗拉强度 | 平均抗拉强度 | 每米重量 |
|---|---|---|---|---|---|---|---|---|---|---|---|---|
| | Pitch | Roller diameter | Width between inner plates | Pin diameter | Pin length | | Inner plate depth | Plate thickness | Transverse pitch | Ultimate tensile strength | Average tensile strength | Weight per meter |
| ISO/DIN Chain No. | P | d1 max | b1 min | d2 max | L max | Lc max | h2 max | t/T max | Pt | Q min | $Q_0$ | q |
| | mm | mm | mm | mm | mm | mm | mm | mm | mm | KN | kN | kg/m |
| 08B-3 | 12.700 | 8.51 | 7.75 | 4.45 | 44.9 | 47.5 | 11.81 | 1.60 | 13.92 | 44.5 | 56.5 | 2.03 |
| 10B-3 | 15.875 | 10.16 | 9.65 | 5.08 | 52.8 | 55.0 | 14.73 | 1.70 | 16.59 | 66.7 | 82.5 | 2.77 |
| 12B-3 | 19.050 | 12.07 | 11.68 | 5.72 | 61.6 | 63.7 | 16.13 | 1.85 | 19.46 | 86.7 | 101.5 | 3.46 |
| 16B-3 | 25.400 | 15.88 | 17.02 | 8.28 | 99.7 | 102.8 | 21.08 | 4.0/3.0 | 31.88 | 160.0 | 195.0 | 8.13 |
| 20B-3 | 31.750 | 19.05 | 19.56 | 10.19 | 114.3 | 119.4 | 26.42 | 4.5/3.5 | 36.45 | 250.0 | 287.0 | 10.82 |
| 24B-3 | 38.100 | 25.40 | 25.40 | 14.63 | 149.8 | 156.0 | 33.40 | 6.0/4.8 | 48.36 | 425.0 | 490.0 | 20.10 |
| 28B-3 | 44.450 | 27.94 | 30.99 | 15.90 | 184.3 | 190.3 | 37.08 | 7.5/6.0 | 59.56 | 530.0 | 660.0 | 24.90 |
| 32B-3 | 50.800 | 29.21 | 30.99 | 17.81 | 183.6 | 189.3 | 42.29 | 7.0/6.0 | 58.55 | 670.0 | 770.0 | 31.56 |
| 40B-3 | 63.500 | 39.37 | 38.10 | 22.89 | 225.6 | 231.2 | 52.96 | 8.5/8.0 | 72.29 | 950.0 | 1090.0 | 48.10 |



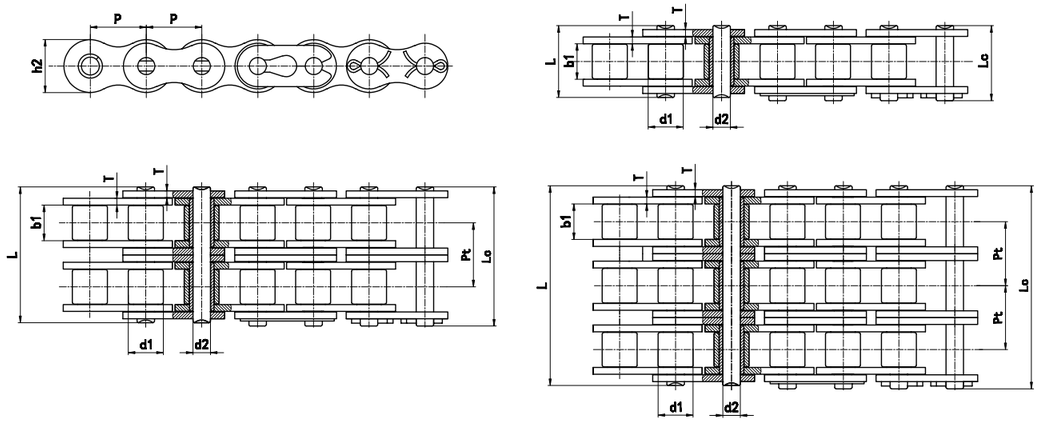


| DIN 链号 | ISO/ANSI 链号 | 节距 | 滚子直径 | 内节内宽 | 销轴直径 | 销轴长度 | | 内链板高度 | 链板厚度 | 排距 | 抗拉强度 | 平均抗拉强度 | 每米重量 |
|---|---|---|---|---|---|---|---|---|---|---|---|---|---|
| | | Pitch | Roller diameter | Width between inner plates | Pin diameter | Pin length | | Inner plate depth | Plate thickness | Transverse pitch | Ultimate tensile strength | Average tensile strength | Weight per meter |
| DIN Chain No. | ISO/ANSI Chain No. | P | d1 max | b1 min | d2 max | L max | Lc max | h2 max | T max | Pt | Q min | $Q_0$ | q |
| | | mm | mm | mm | mm | mm | mm | mm | mm | mm | KN | KN | kg/m |
| 08AH-1 | 40H-1 | 12.700 | 7.92 | 7.85 | 3.98 | 18.8 | 20.0 | 12.07 | 2.00 | / | 13.9 | 19.2 | 0.82 |
| 10AH-1 | 50H-1 | 15.875 | 10.16 | 9.40 | 5.09 | 22.1 | 23.9 | 15.09 | 2.42 | / | 21.8 | 30.1 | 1.25 |
| 12AH-1 | 60H-1 | 19.050 | 11.91 | 12.57 | 5.96 | 30.0 | 32.3 | 18.10 | 3.20 | / | 31.3 | 42.0 | 1.89 |
| 16AH-1 | 80H-1 | 25.400 | 15.88 | 15.75 | 7.94 | 36.8 | 40.5 | 24.13 | 4.00 | / | 55.6 | 72.0 | 3.10 |
| 20AH-1 | 100H-1 | 31.750 | 19.05 | 18.90 | 9.54 | 44.2 | 47.6 | 30.17 | 4.80 | / | 87.0 | 112.0 | 4.50 |
| 24AH-1 | 120H-1 | 38.100 | 22.23 | 25.22 | 11.11 | 54.5 | 58.2 | 36.20 | 5.60 | / | 125.0 | 160.0 | 6.60 |
| 28AH-1 | 140H-1 | 44.450 | 25.40 | 25.22 | 12.71 | 58.2 | 64.5 | 42.23 | 6.40 | / | 170.0 | 217.5 | 8.30 |
| 32AH-1 | 160H-1 | 50.800 | 28.58 | 31.55 | 14.29 | 68.9 | 73.4 | 48.26 | 7.20 | / | 223.0 | 285.0 | 10.30 |
| 40AH-1 | 200H-1 | 63.500 | 39.68 | 37.85 | 19.85 | 87.1 | 94.2 | 60.33 | 9.50 | / | 347.0 | 445.0 | 19.16 |
| 12AH-2 | 60H-2 | 19.050 | 11.91 | 12.57 | 5.96 | 55.9 | 58.2 | 18.10 | 3.20 | 26.11 | 62.6 | 84.5 | 3.70 |
| 16AH-2 | 80H-2 | 25.400 | 15.88 | 15.75 | 7.94 | 69.1 | 72.8 | 24.13 | 4.00 | 32.59 | 112.2 | 145.0 | 6.15 |
| 20AH-2 | 100H-2 | 31.750 | 19.05 | 18.90 | 9.54 | 83.2 | 86.7 | 30.17 | 4.80 | 39.09 | 174.0 | 224.0 | 9.00 |
| 24AH-2 | 120H-2 | 38.100 | 22.23 | 25.22 | 11.11 | 102.9 | 107.1 | 36.20 | 5.60 | 48.87 | 250.0 | 320.0 | 13.13 |
| 28AH-2 | 140H-2 | 44.450 | 25.40 | 25.22 | 12.71 | 110.1 | 116.4 | 42.23 | 6.40 | 52.20 | 340.0 | 437.0 | 16.60 |
| 32AH-2 | 160H-2 | 50.800 | 28.58 | 31.55 | 14.29 | 130.5 | 135.1 | 48.26 | 7.20 | 61.90 | 446.0 | 572.0 | 20.20 |
| 40AH-2 | 200H-2 | 63.500 | 39.68 | 37.85 | 19.85 | 165.4 | 172.5 | 60.33 | 9.50 | 78.31 | 694.0 | 894.9 | 38.11 |
| 12AH-3 | 60H-3 | 19.050 | 11.91 | 12.57 | 5.96 | 81.9 | 83.9 | 18.10 | 3.20 | 26.11 | 93.9 | 115.0 | 5.52 |
| 16AH-3 | 80H-3 | 25.400 | 15.88 | 15.75 | 7.94 | 101.8 | 105.5 | 24.13 | 4.00 | 32.59 | 166.8 | 205.0 | 9.42 |
| 20AH-3 | 100H-3 | 31.750 | 19.05 | 18.90 | 9.54 | 122.3 | 125.8 | 30.17 | 4.80 | 39.09 | 261.0 | 315.0 | 12.96 |
| 24AH-3 | 120H-3 | 38.100 | 22.23 | 25.22 | 11.11 | 151.7 | 155.9 | 36.20 | 5.60 | 48.87 | 375.0 | 446.0 | 19.64 |
| 28AH-3 | 140H-3 | 44.450 | 25.40 | 25.22 | 12.71 | 162.0 | 168.3 | 42.23 | 6.40 | 52.20 | 510.0 | 598.5 | 24.90 |
| 32AH-3 | 160H-3 | 50.800 | 28.58 | 31.55 | 14.29 | 192.1 | 196.4 | 48.26 | 7.20 | 61.90 | 669.0 | 787.5 | 30.10 |
| 40AH-3 | 200H-3 | 63.500 | 39.68 | 37.85 | 19.85 | 243.7 | 250.8 | 60.33 | 9.50 | 78.31 | 1041.0 | 1228.0 | 57.05 |

# B系列加重型滚子链 Heavy Duty Series Roller Chains (B Series)

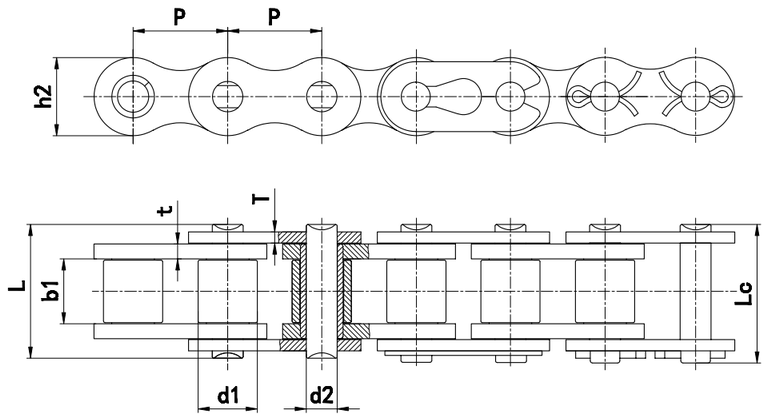


| 征和链号 CHOHO Chain No. | 节距 Pitch P mm | 滚子直径 Roller diameter d1 max mm | 内节内宽 Width between inner plates b1 min mm | 销轴直径 Pin diameter d2 max mm | 销轴长度 Pin length L max mm | 销轴长度 Pin length Lc max mm | 内链板高度 Inner plate depth h2 max mm | 链板厚度 Plate thickness t/T max mm | 抗拉强度 Ultimate tensile strength Q min KN | 平均抗拉强度 Average tensile strength $Q_0$ kN | 每米重量 Weight per meter q kg/m |
|---|---|---|---|---|---|---|---|---|---|---|---|
| 08BH-1 | 12.700 | 8.51 | 7.75 | 4.45 | 18.8 | 20.0 | 11.81 | 2.00 | 17.8 | 20.6 | 0.79 |
| 10BH-1 | 15.875 | 10.16 | 9.65 | 5.08 | 20.2 | 21.6 | 14.73 | 1.85 | 22.2 | 25.0 | 1.03 |
| 12BH-1 | 19.050 | 12.07 | 11.68 | 6.10 | 25.2 | 26.8 | 18.10 | 2.42 | 28.9 | 40.0 | 1.50 |
| 16BH-1 | 25.400 | 15.88 | 17.02 | 8.90 | 36.0 | 38.9 | 24.10 | 4.0/3.0 | 60.0 | 80.0 | 3.11 |
| 20BH-1 | 31.750 | 19.05 | 19.56 | 10.19 | 48.3 | 52.0 | 26.40 | 6.0/4.8 | 95.0 | 110.0 | 6.10 |
| 24BH-1 | 38.100 | 25.40 | 25.40 | 14.63 | 58.6 | 63.4 | 36.20 | 7.5/6.0 | 160.0 | 225.0 | 9.00 |





# 双节距精密滚子链 Double Pitch Precision Roller Chains

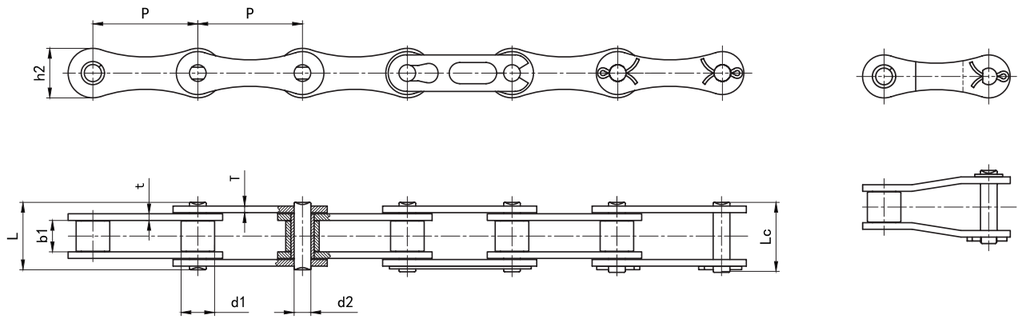


| ISO/DIN 链号 ISO/DIN Chain No. | ANSI 链号 ANSI Chain No. | 节距 Pitch P mm | 滚子直径 Roller diameter d1 max mm | 内节内宽 Width between inner plates b1 min mm | 销轴直径 Pin diameter d2 max mm | 销轴长度 Pin length L max mm | 销轴长度 Pin length Lc max mm | 内链板高度 Inner plate depth h2 max mm | 链板厚度 Plate thickness t/T max mm | 抗拉强度 Ultimate tensile strength Q min KN | 平均抗拉强度 Average tensile strength $Q_0$ KN | 每米重量 Weight per meter q kg/m |
|---|---|---|---|---|---|---|---|---|---|---|---|---|
| 208A | 2040 | 25.40 | 7.92 | 7.85 | 3.98 | 16.7 | 18.3 | 12.07 | 1.50 | 13.9 | 17.9 | 0.42 |
| 208B | / | 25.40 | 8.51 | 7.75 | 4.45 | 17.0 | 19.2 | 11.81 | 1.60 | 17.8 | 19.8 | 0.45 |
| 210A | 2050 | 31.75 | 10.16 | 9.40 | 5.09 | 20.7 | 23.8 | 15.09 | 2.00 | 21.8 | 29.3 | 0.72 |
| 210B | / | 31.75 | 10.16 | 9.65 | 5.08 | 19.6 | 22.3 | 14.73 | 1.70 | 22.2 | 27.5 | 0.65 |
| 212A | 2060 | 38.10 | 11.91 | 12.57 | 5.96 | 26.2 | 28.3 | 18.10 | 2.42 | 31.3 | 42.0 | 1.02 |
| 212B | / | 38.10 | 12.07 | 11.68 | 5.72 | 22.6 | 25.0 | 16.13 | 1.85 | 28.9 | 32.3 | 0.76 |
| 216A | 2080 | 50.80 | 15.88 | 15.75 | 7.94 | 32.9 | 36.4 | 24.13 | 3.10 | 55.6 | 72.3 | 1.70 |
| 216B | / | 50.80 | 15.88 | 17.02 | 8.28 | 36.1 | 39.2 | 21.08 | 4.0/3.0 | 60.0 | 72.5 | 1.75 |
| 220A | 2100 | 63.50 | 19.05 | 18.90 | 9.54 | 40.8 | 44.1 | 30.17 | 4.00 | 87.0 | 110.5 | 2.53 |
| 220B | / | 63.50 | 19.05 | 19.56 | 10.19 | 41.4 | 46.5 | 26.42 | 4.5/3.5 | 95.0 | 106.0 | 2.62 |
| 224A | 2120 | 76.20 | 22.23 | 25.22 | 11.11 | 50.8 | 54.7 | 36.20 | 4.80 | 125.0 | 157.0 | 4.07 |
| 224B | / | 76.20 | 25.40 | 25.40 | 14.63 | 53.4 | 59.9 | 33.40 | 6.0/4.8 | 160.0 | 178.3 | 4.70 |
| 228B | / | 88.90 | 27.94 | 30.99 | 15.90 | 65.1 | 71.5 | 37.08 | 7.5/6.0 | 200.0 | 220.0 | 6.25 |
| 232B | / | 101.60 | 29.21 | 30.99 | 17.81 | 66.8 | 72.5 | 42.29 | 7.0/6.0 | 250.0 | 278.0 | 6.71 |

# G系列高耐磨滚子链 High Wear-Resistance Roller Chains ( G Series)



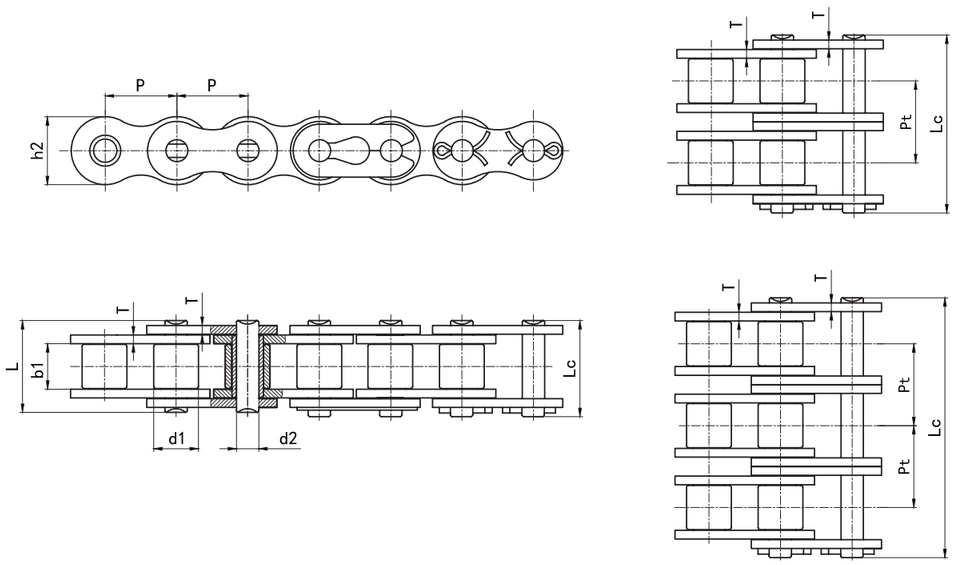


| 征和链号 CHOHO Chain No. | 节距 Pitch | 滚子直径 Roller diameter | 内节内宽 Width between inner plates | 销轴直径 Pin diameter | 销轴长度 Pin length | | 内链板高度 Inner plate depth | 链板厚度 Plate thickness | 排距 Transverse pitch | 抗拉强度 Ultimate tensile strength | 平均抗拉强度 Average tensile strength | 每米重量 Weight per meter |
|---|---|---|---|---|---|---|---|---|---|---|---|---|
| | P | d1 max | b1 min | d2 max | L max | Lc max | h2 max | T max | Pt | Q min | $Q_0$ | q |
| | mm | mm | mm | mm | mm | mm | mm | mm | mm | KN | KN | kg/m |
| G40-1 | 12.700 | 7.92 | 7.85 | 3.98 | 16.7 | 18.3 | 12.07 | 1.50 | / | 17.7 | 19.1 | 0.65 |
| G50-1 | 15.875 | 10.16 | 9.40 | 5.09 | 20.7 | 23.8 | 15.09 | 2.00 | / | 28.4 | 31.4 | 1.04 |
| G60-1 | 19.050 | 11.91 | 12.57 | 5.96 | 26.2 | 28.3 | 18.10 | 2.42 | / | 38.2 | 42.0 | 1.53 |
| G80-1 | 25.400 | 15.88 | 15.75 | 7.94 | 32.9 | 36.4 | 24.13 | 3.20 | / | 71.6 | 76.0 | 2.66 |
| G40-2 | 12.700 | 7.92 | 7.85 | 3.98 | 31.2 | 33.3 | 12.07 | 1.50 | 14.38 | 34.3 | 36.2 | 1.15 |
| G50-2 | 15.875 | 10.16 | 9.40 | 5.09 | 39.1 | 40.6 | 15.09 | 2.00 | 18.11 | 56.9 | 60.8 | 2.03 |
| G60-2 | 19.050 | 11.91 | 12.57 | 5.96 | 49.1 | 50.8 | 18.10 | 2.42 | 22.78 | 79.4 | 82.0 | 2.94 |
| G80-2 | 25.400 | 15.88 | 15.75 | 7.94 | 62.1 | 65.5 | 24.13 | 3.20 | 29.29 | 143.0 | 150.0 | 5.45 |
| G40-3 | 12.700 | 7.92 | 7.85 | 3.98 | 45.5 | 47.1 | 12.07 | 1.50 | 14.38 | 50.0 | 53.3 | 1.90 |
| G50-3 | 15.875 | 10.16 | 9.40 | 5.09 | 56.9 | 58.3 | 15.09 | 2.00 | 18.11 | 82.0 | 86.2 | 3.09 |
| G60-3 | 19.050 | 11.91 | 12.57 | 5.96 | 71.8 | 73.6 | 18.10 | 2.42 | 22.78 | 110.0 | 118.0 | 4.54 |
| G80-3 | 25.400 | 15.88 | 15.75 | 7.94 | 91.8 | 95.1 | 24.13 | 3.20 | 29.29 | 202.0 | 220.0 | 7.89 |





# T系列高强度滚子链 High Strengthing Roller Chains (T series)

## ■ 单排、双排、三排 Simplex / Duplex/ Triplex

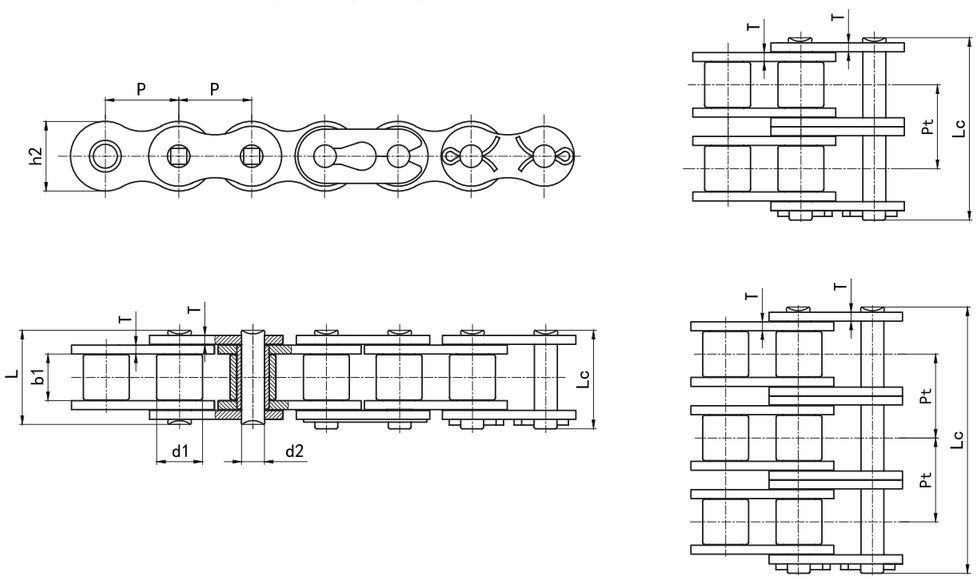


| 征和链号 CHOHO Chain No. | 节距 Pitch | 滚子直径 Roller diameter | 内节内宽 Width between inner plates | 销轴直径 Pin diameter | 销轴长度 Pin length | | 内链板高度 Inner plate depth | 链板厚度 Plate thickness | 排距 Transverse pitch | 抗拉强度 Ultimate tensile strength | 平均抗拉强度 Average tensile strength | 每米重量 Weight per meter |
|---|---|---|---|---|---|---|---|---|---|---|---|---|
| | P | d1 max | b1 min | d2 max | L max | Lc max | h2 max | T max | Pt | Q min | $Q_0$ | q |
| | mm | mm | mm | mm | mm | mm | mm | mm | mm | KN | KN | kg/m |
| 80T-1 | 25.400 | 15.88 | 15.75 | 7.94 | 32.9 | 36.4 | 24.13 | 3.20 | / | 74.2 | 83.0 | 2.66 |
| 100T-1 | 31.750 | 19.05 | 18.90 | 9.54 | 40.8 | 44.1 | 30.17 | 4.00 | / | 111.0 | 124.0 | 3.99 |
| 120T-1 | 38.100 | 22.23 | 25.22 | 11.11 | 50.8 | 54.7 | 36.20 | 4.80 | / | 162.0 | 176.5 | 5.93 |
| 140T-1 | 44.450 | 25.40 | 25.22 | 12.71 | 54.7 | 61.0 | 42.23 | 5.60 | / | 213.0 | 232.0 | 7.52 |
| 160T-1 | 50.800 | 28.58 | 31.55 | 14.29 | 65.5 | 70.0 | 48.26 | 6.40 | / | 273.0 | 298.0 | 10.10 |
| 80T-2 | 25.400 | 15.88 | 15.75 | 7.94 | 62.1 | 65.5 | 24.13 | 3.20 | 29.29 | 148.0 | 162.0 | 5.45 |
| 100T-2 | 31.750 | 19.05 | 18.90 | 9.54 | 76.6 | 80.5 | 30.17 | 4.00 | 35.76 | 222.0 | 242.0 | 7.80 |
| 120T-2 | 38.100 | 22.23 | 25.22 | 11.11 | 96.3 | 100.2 | 36.20 | 4.80 | 45.44 | 324.0 | 354.0 | 11.70 |
| 140T-2 | 44.450 | 25.40 | 25.22 | 12.71 | 103.6 | 110.1 | 42.23 | 5.60 | 48.87 | 426.0 | 465.0 | 15.51 |
| 160T-2 | 50.800 | 28.58 | 31.55 | 14.29 | 124.1 | 128.6 | 48.26 | 6.40 | 58.55 | 545.0 | 596.0 | 20.35 |
| 80T-3 | 25.400 | 15.88 | 15.75 | 7.94 | 91.8 | 95.1 | 24.13 | 3.20 | 29.29 | 223.0 | 243.0 | 7.89 |
| 100T-3 | 31.750 | 19.05 | 18.90 | 9.54 | 112.1 | 116.7 | 30.17 | 4.00 | 35.76 | 332.0 | 363.0 | 11.80 |
| 120T-3 | 38.100 | 22.23 | 25.22 | 11.11 | 141.3 | 145.2 | 36.20 | 4.80 | 45.44 | 485.0 | 531.0 | 17.53 |
| 140T-3 | 44.450 | 25.40 | 25.22 | 12.71 | 152.0 | 157.9 | 42.23 | 5.60 | 48.87 | 638.0 | 698.0 | 22.20 |
| 160T-3 | 50.800 | 28.58 | 31.55 | 14.29 | 181.8 | 186.3 | 48.26 | 6.40 | 58.55 | 818.0 | 893.0 | 30.12 |

# HT 系列高强度滚子链 High Strengthing Roller Chains (HT Series)



## ■ 单排、双排、三排 Simplex / Duplex/ Triplex

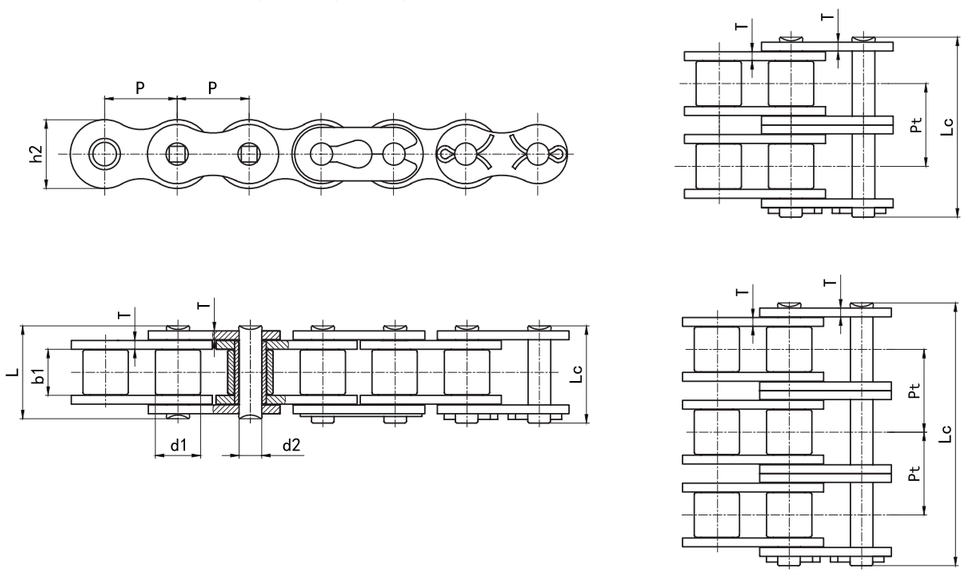


| 征和链号 CHOHO Chain No. | 节距 Pitch | 滚子直径 Roller diameter | 内节内宽 Width between inner plates | 销轴直径 Pin diameter | 销轴长度 Pin length | | 内链板高度 Inner plate depth | 链板厚度 Plate thickness | 排距 Transverse pitch | 抗拉强度 Ultimate tensile strength | 平均抗拉强度 Average tensile strength | 每米重量 Weight per meter |
|---|---|---|---|---|---|---|---|---|---|---|---|---|
| | P | d1 max | b1 min | d2 max | L max | Lc max | h2 max | T max | Pt | Q min | $Q_0$ | q |
| | mm | mm | mm | mm | mm | mm | mm | mm | mm | KN | KN | kg/m |
| 60HT-1 | 19.050 | 11.91 | 12.57 | 5.96 | 30.0 | 32.3 | 18.10 | 3.20 | / | 48.1 | 54.00 | 1.89 |
| 80HT-1 | 25.400 | 15.88 | 15.75 | 7.94 | 36.8 | 40.5 | 24.13 | 4.00 | / | 81.5 | 92.5 | 3.10 |
| 100HT-1 | 31.750 | 19.05 | 18.90 | 9.54 | 44.2 | 47.6 | 30.17 | 4.80 | / | 125.0 | 140.0 | 4.50 |
| 120HT-1 | 38.100 | 22.23 | 25.22 | 11.11 | 54.5 | 58.2 | 36.20 | 5.60 | / | 167.0 | 190.0 | 6.60 |
| 140HT-1 | 44.450 | 25.40 | 25.22 | 12.71 | 58.2 | 64.5 | 42.23 | 6.40 | / | 218.0 | 250.0 | 8.30 |
| 160HT-1 | 50.800 | 28.58 | 31.55 | 14.29 | 68.9 | 73.4 | 48.26 | 7.20 | / | 279.0 | 310.0 | 10.30 |
| 60HT-2 | 19.050 | 11.91 | 12.57 | 5.96 | 55.9 | 58.2 | 18.10 | 3.20 | 26.11 | 96.5 | 108.0 | 3.71 |
| 80HT-2 | 25.400 | 15.88 | 15.75 | 7.94 | 69.1 | 72.8 | 24.13 | 4.00 | 32.59 | 163.0 | 185.0 | 6.18 |
| 100HT-2 | 31.750 | 19.05 | 18.90 | 9.54 | 83.2 | 86.7 | 30.17 | 4.80 | 39.09 | 248.0 | 280.0 | 9.03 |
| 120HT-2 | 38.100 | 22.23 | 25.22 | 11.11 | 102.9 | 107.1 | 36.20 | 5.60 | 48.87 | 335.0 | 380.0 | 13.13 |
| 140HT-2 | 44.450 | 25.40 | 25.22 | 12.71 | 110.1 | 116.4 | 42.23 | 6.40 | 52.20 | 435.0 | 500.0 | 16.60 |
| 160HT-2 | 50.800 | 28.58 | 31.55 | 14.29 | 130.5 | 135.1 | 48.26 | 7.20 | 61.09 | 555.0 | 620.0 | 20.20 |
| 60HT-3 | 19.050 | 11.91 | 12.57 | 5.96 | 81.9 | 83.9 | 18.10 | 3.20 | 26.11 | 144.0 | 163.0 | 5.54 |
| 80HT-3 | 25.400 | 15.88 | 15.75 | 7.94 | 101.8 | 105.5 | 24.13 | 4.00 | 32.59 | 244.0 | 278.0 | 9.42 |
| 100HT-3 | 31.750 | 19.05 | 18.90 | 9.54 | 122.3 | 125.8 | 30.17 | 4.80 | 39.09 | 371.0 | 420.0 | 13.02 |
| 120HT-3 | 38.100 | 22.23 | 25.22 | 11.11 | 151.7 | 155.9 | 36.20 | 5.60 | 48.87 | 500.0 | 570.0 | 19.64 |
| 140HT-3 | 44.450 | 25.40 | 25.22 | 12.71 | 162.0 | 168.3 | 42.23 | 6.40 | 52.20 | 653.0 | 750.0 | 24.90 |
| 160HT-3 | 50.800 | 28.58 | 31.55 | 14.29 | 192.1 | 196.4 | 48.26 | 7.20 | 61.09 | 833.0 | 930.0 | 30.10 |





# HS 系列超强滚子链 Super Strengthing Roller Chains (HS Series)



## ■ 单排、双排、三排 Simplex / Duplex/ Triplex

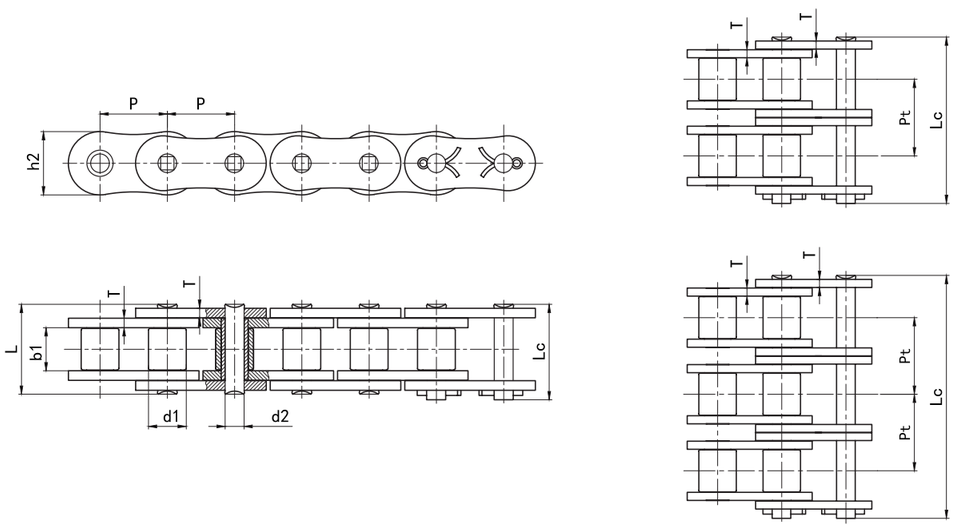


| 征和链号 CHOHO Chain No. | 节距 Pitch | 滚子直径 Roller diameter | 内节内宽 Width between inner plates | 销轴直径 Pin diameter | 销轴长度 Pin length | | 内链板高度 Inner plate depth | 链板厚度 Plate thickness | 排距 Transverse pitch | 抗拉强度 Ultimate tensile strength | 平均抗拉强度 Average tensile strength | 每米重量 Weight per meter |
|---|---|---|---|---|---|---|---|---|---|---|---|---|
| | P | d1 max | b1 min | d2 max | L max | Lc max | h2 max | T max | Pt | Q min | $Q_0$ | q |
| | mm | mm | mm | mm | mm | mm | mm | mm | mm | KN | KN | kg/m |
| 80HS-1 | 25.400 | 15.88 | 15.75 | 7.94 | 36.8 | 40.5 | 24.13 | 4.00 | / | 85.0 | 96.5 | 3.30 |
| 100HS-1 | 31.750 | 19.05 | 18.90 | 9.54 | 44.2 | 47.6 | 30.17 | 4.80 | / | 126.0 | 143.0 | 4.90 |
| 120HS-1 | 38.100 | 22.23 | 25.22 | 11.11 | 54.5 | 58.2 | 36.20 | 5.60 | / | 172.0 | 194.0 | 7.10 |
| 140HS-1 | 44.450 | 25.40 | 25.22 | 12.71 | 58.2 | 64.5 | 42.23 | 6.40 | / | 223.0 | 255.0 | 8.88 |
| 160HS-1 | 50.800 | 28.58 | 31.55 | 14.29 | 68.9 | 73.4 | 48.26 | 7.20 | / | 283.0 | 315.0 | 11.72 |
| 80HS-2 | 25.400 | 15.88 | 15.75 | 7.94 | 69.1 | 72.8 | 24.13 | 4.00 | 32.59 | 172.0 | 193.0 | 6.60 |
| 100HS-2 | 31.750 | 19.05 | 18.90 | 9.54 | 83.2 | 86.7 | 30.17 | 4.80 | 39.09 | 255.0 | 286.0 | 9.60 |
| 120HS-2 | 38.100 | 22.23 | 25.22 | 11.11 | 102.9 | 107.1 | 36.20 | 5.60 | 48.87 | 344.0 | 388.0 | 13.60 |
| 140HS-2 | 44.450 | 25.40 | 25.22 | 12.71 | 110.1 | 116.4 | 42.23 | 6.40 | 52.20 | 443.0 | 510.0 | 17.38 |
| 160HS-2 | 50.800 | 28.58 | 31.55 | 14.29 | 130.5 | 135.1 | 48.26 | 7.20 | 61.09 | 563.0 | 630.0 | 23.00 |
| 80HS-3 | 25.400 | 15.88 | 15.75 | 7.94 | 101.8 | 105.5 | 24.13 | 4.00 | 32.59 | 256.0 | 290.0 | 9.95 |
| 100HS-3 | 31.750 | 19.05 | 18.90 | 9.54 | 122.3 | 125.8 | 30.17 | 4.80 | 39.09 | 380.0 | 429.0 | 14.30 |
| 120HS-3 | 38.100 | 22.23 | 25.22 | 11.11 | 151.7 | 155.9 | 36.20 | 5.60 | 48.87 | 513.0 | 582.0 | 20.15 |
| 140HS-3 | 44.450 | 25.40 | 25.22 | 12.71 | 162.0 | 168.3 | 42.23 | 6.40 | 52.20 | 667.0 | 765.0 | 25.90 |
| 160HS-3 | 50.800 | 28.58 | 31.55 | 14.29 | 192.1 | 196.4 | 48.26 | 7.20 | 61.09 | 845.0 | 945.0 | 34.22 |

# HDS 系列高性能滚子链 High Performance Roller Chains (HDS Series)

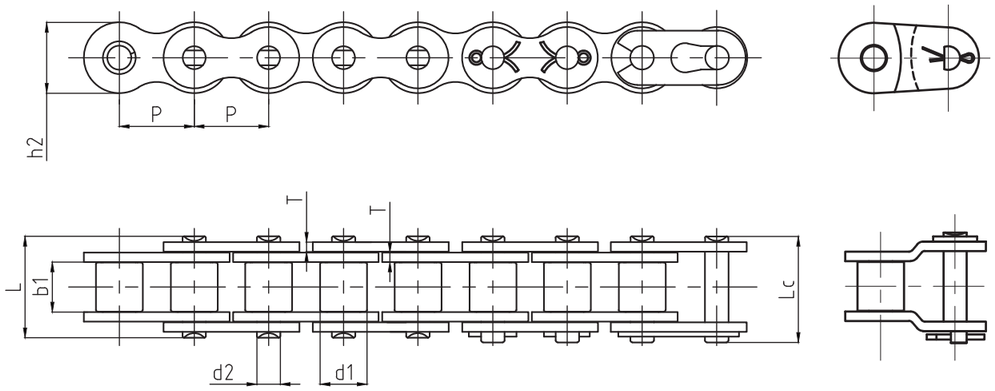


| 征和链号 CHOHO Chain No. | 节距 Pitch P mm | 滚子直径 Roller diameter d1 max mm | 内节内宽 Width between inner plates b1 min mm | 销轴直径 Pin diameter d2 max mm | 销轴长度 Pin length L max mm | 销轴长度 Pin length Lc max mm | 内链板高度 Inner plate depth h2 max mm | 链板厚度 Plate thickness T max mm | 抗拉强度 Ultimate tensile strength Q min KN | 平均抗拉强度 Average tensile strength $Q_0$ KN | 每米重量 Weight per meter q kg/m |
|---|---|---|---|---|---|---|---|---|---|---|---|
| 50H-HDS | 15.88 | 10.16 | 9.40 | 5.04 | 22.1 | 24.2 | 15.1 | 2.42 | 30.0 | 40.2 | 1.3 |
| 60H-HDS | 19.05 | 11.91 | 12.57 | 5.96 | 30.0 | 32.3 | 18.10 | 3.200 | 35 | 46.9 | 1.89 |
| 520HT1 | 15.88 | 10.22 | 6.25 | 5.30 | 19.3 | / | 15.3 | 2.42 | 33.0 | 38.5 | 1.23 |
| 520HT6 | 15.88 | 10.22 | 6.25 | 5.30 | 19.3 | / | 15.3 | 2.42 | 38.0 | 42.0 | 1.23 |
| 50HT2 | 15.875 | 10.16 | 9.40 | 5.30 | 22.1 | 24.2 | 15.3 | 2.42 | 33.0 | 42.8 | 1.3 |





# A系列高疲劳滚子链 High Fatigue Roller Chains (A Series)

## ■ 单排、双排、三排 Simplex / Duplex/ Triplex

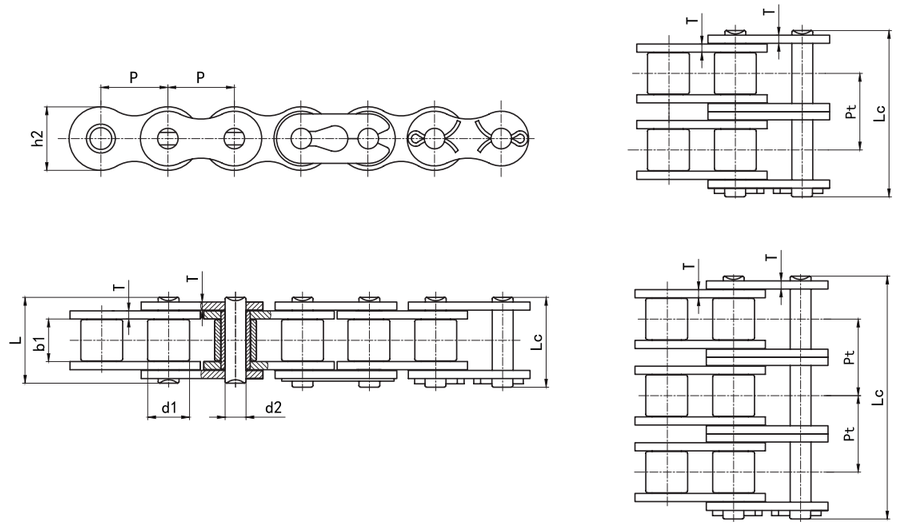


| 征和链号 CHOHO Chain No. | 节距 Pitch P mm | 滚子直径 Roller diameter d1 max mm | 内节内宽 Width between inner plates b1 min mm | 销轴直径 Pin diameter d2 max mm | 销轴长度 Pin length L max mm | 销轴长度 Pin length Lc max mm | 内链板高度 Inner plate depth h2 max mm | 链板厚度 Plate thickness T max mm | 排距 Transverse pitch Pt mm | 抗拉强度 Ultimate tensile strength Q min KN | 平均抗拉强度 Average tensile strength $Q_0$ KN | 每米重量 Weight per meter q kg/m |
|---|---|---|---|---|---|---|---|---|---|---|---|---|
| 40-HDS-1 | 12.700 | 7.92 | 7.85 | 3.98 | 16.7 | 18.3 | 12.07 | 1.50 | / | 17.7 | 19.1 | 0.65 |
| 50-HDS-1 | 15.875 | 10.16 | 9.40 | 5.09 | 20.7 | 23.8 | 15.09 | 2.00 | / | 28.4 | 31.4 | 1.04 |
| 60-HDS-1 | 19.050 | 11.91 | 12.57 | 5.96 | 26.2 | 28.3 | 18.10 | 2.42 | / | 38.2 | 42.0 | 1.53 |
| 80-HDS-1 | 25.400 | 15.88 | 15.75 | 7.94 | 32.9 | 36.4 | 24.13 | 3.20 | / | 71.6 | 76.0 | 2.66 |
| 100-HDS-1 | 31.750 | 19.05 | 18.90 | 9.54 | 40.8 | 44.1 | 30.17 | 4.00 | / | 100.0 | 110.5 | 3.90 |
| 120-HDS-1 | 38.100 | 22.23 | 25.22 | 11.11 | 50.8 | 54.7 | 36.20 | 4.80 | / | 145.0 | 157.0 | 5.60 |
| 140-HDS-1 | 44.450 | 25.40 | 25.22 | 12.71 | 54.7 | 61.0 | 42.23 | 5.60 | / | 183.0 | 213.2 | 7.52 |
| 160-HDS-1 | 50.800 | 28.58 | 31.55 | 14.29 | 65.5 | 70.0 | 48.26 | 6.40 | / | 249.0 | 279.0 | 10.08 |
| 40-HDS-2 | 12.700 | 7.92 | 7.85 | 3.98 | 31.2 | 33.3 | 12.07 | 1.50 | 14.38 | 34.3 | 36.2 | 1.15 |
| 50-HDS-2 | 15.875 | 10.16 | 9.40 | 5.09 | 39.1 | 40.6 | 15.09 | 2.00 | 18.11 | 56.9 | 60.8 | 2.03 |
| 60-HDS-2 | 19.050 | 11.91 | 12.57 | 5.96 | 49.1 | 50.8 | 18.10 | 2.42 | 22.78 | 79.4 | 82.0 | 2.94 |
| 80-HDS-2 | 25.400 | 15.88 | 15.75 | 7.94 | 62.1 | 65.5 | 24.13 | 3.20 | 29.29 | 143.0 | 150.0 | 5.45 |
| 100-HDS-2 | 31.750 | 19.05 | 18.90 | 9.54 | 76.6 | 80.5 | 30.17 | 4.00 | 35.76 | 200.0 | 219.9 | 7.80 |
| 120-HDS-2 | 38.100 | 22.23 | 25.22 | 11.11 | 96.3 | 100.2 | 36.20 | 4.80 | 45.44 | 290.0 | 314.8 | 11.63 |
| 140-HDS-2 | 44.450 | 25.40 | 25.22 | 12.71 | 103.6 | 110.1 | 42.23 | 5.60 | 48.87 | 366.0 | 427.9 | 15.21 |
| 160-HDS-2 | 50.800 | 28.58 | 31.55 | 14.29 | 124.1 | 128.6 | 48.26 | 6.40 | 58.55 | 498.0 | 561.8 | 20.25 |
| 40-HDS-3 | 12.700 | 7.92 | 7.85 | 3.98 | 45.5 | 47.1 | 12.07 | 1.50 | 14.38 | 50.0 | 53.3 | 1.90 |
| 50-HDS-3 | 15.875 | 10.16 | 9.40 | 5.09 | 56.9 | 58.3 | 15.09 | 2.00 | 18.11 | 82.0 | 86.2 | 3.09 |
| 60-HDS-3 | 19.050 | 11.91 | 12.57 | 5.96 | 71.8 | 73.6 | 18.10 | 2.42 | 22.78 | 110.0 | 118.0 | 4.54 |
| 80-HDS-3 | 25.400 | 15.88 | 15.75 | 7.94 | 91.8 | 95.1 | 24.13 | 3.20 | 29.29 | 202.0 | 220.0 | 7.89 |
| 100-HDS-3 | 31.750 | 19.05 | 18.90 | 9.54 | 112.1 | 116.7 | 30.17 | 4.00 | 35.76 | 290.0 | 310.0 | 11.80 |
| 120-HDS-3 | 38.100 | 22.23 | 25.22 | 11.11 | 141.3 | 145.2 | 36.20 | 4.80 | 45.44 | 419.0 | 439.0 | 17.53 |
| 140-HDS-3 | 44.450 | 25.40 | 25.22 | 12.71 | 152.0 | 157.9 | 42.23 | 5.60 | 48.87 | 559.0 | 596.0 | 22.20 |
| 160-HDS-3 | 50.800 | 28.58 | 31.55 | 14.29 | 181.8 | 186.3 | 48.26 | 6.40 | 58.55 | 747.0 | 782.0 | 30.12 |

# B系列高疲劳滚子链 High Fatigue Roller Chains (B Series)



## ■ 单排、双排、三排 Simplex / Duplex/ Triplex

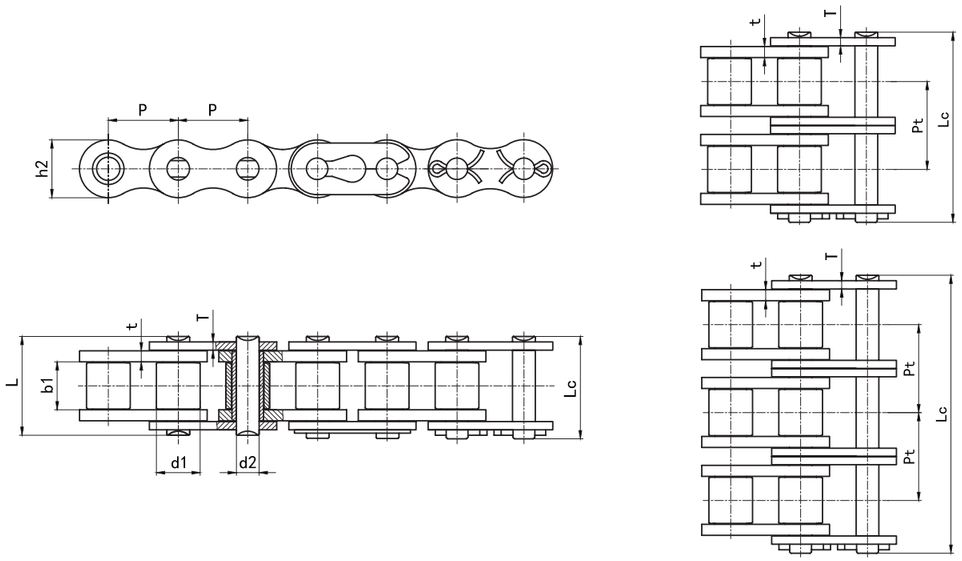


| 征和链号 CHOHO Chain No. | 节距 Pitch | 滚子直径 Roller diameter | 内节内宽 Width between inner plates | 销轴直径 Pin diameter | 销轴长度 Pin length | | 内链板高度 Inner plate depth | 链板厚度 Plate thickness | 排距 Transverse pitch | 抗拉强度 Ultimate tensile strength | 平均抗拉强度 Average tensile strength | 每米重量 Weight per meter |
|---|---|---|---|---|---|---|---|---|---|---|---|---|
| | P | d1 max | b1 min | d2 max | L max | Lc max | h2 max | t/T max | Pt | Q min | $Q_0$ | q |
| | mm | mm | mm | mm | mm | mm | mm | mm | mm | KN | KN | kg/m |
| 08B-HDS-1 | 12.700 | 8.51 | 7.75 | 4.45 | 17.0 | 19.2 | 11.81 | 1.60 | / | 18.0 | 19.8 | 0.75 |
| 10B-HDS-1 | 15.875 | 10.16 | 9.65 | 5.08 | 19.6 | 22.3 | 14.73 | 1.70 | / | 24.0 | 27.5 | 0.98 |
| 12B-HDS-1 | 19.050 | 12.07 | 11.68 | 5.72 | 22.6 | 25.0 | 16.13 | 1.85 | / | 30.0 | 32.3 | 1.26 |
| 16B-HDS-1 | 25.400 | 15.88 | 17.02 | 8.28 | 36.1 | 39.2 | 21.08 | 4.0/3.2 | / | 65.0 | 75.0 | 2.82 |
| 20B-HDS-1 | 31.750 | 19.05 | 19.56 | 10.19 | 41.4 | 46.5 | 26.42 | 4.5/3.5 | / | 100.0 | 109.9 | 3.94 |
| 24B-HDS-1 | 38.100 | 25.40 | 25.40 | 14.63 | 53.4 | 59.9 | 33.40 | 6.0/4.8 | / | 168.0 | 178.3 | 7.21 |
| 28B-HDS-1 | 44.450 | 27.94 | 30.99 | 15.90 | 65.1 | 71.5 | 37.08 | 7.5/6.0 | / | 210.0 | 235.0 | 9.55 |
| 32B-HDS-1 | 50.800 | 29.21 | 30.99 | 17.81 | 66.8 | 72.5 | 42.29 | 7.0/6.0 | / | 260.0 | 272.0 | 10.25 |
| 08B-HDS-2 | 12.700 | 8.51 | 7.75 | 4.45 | 31.0 | 32.7 | 11.81 | 1.60 | 13.92 | 36.0 | 38.4 | 1.45 |
| 10B-HDS-2 | 15.875 | 10.16 | 9.65 | 5.08 | 36.2 | 38.3 | 14.73 | 1.70 | 16.59 | 48.0 | 55.0 | 1.93 |
| 12B-HDS-2 | 19.050 | 12.07 | 11.68 | 5.72 | 42.0 | 44.4 | 16.13 | 1.85 | 19.46 | 60.0 | 66.3 | 2.49 |
| 16B-HDS-2 | 25.400 | 15.88 | 17.02 | 8.28 | 68.0 | 71.2 | 21.08 | 4.0/3.2 | 31.88 | 130.0 | 150.0 | 5.41 |
| 20B-HDS-2 | 31.750 | 19.05 | 19.56 | 10.19 | 77.9 | 83.0 | 26.42 | 4.5/3.5 | 36.45 | 200.0 | 219.0 | 7.50 |
| 24B-HDS-2 | 38.100 | 25.40 | 25.40 | 14.63 | 101.8 | 108.5 | 33.40 | 6.0/4.8 | 48.36 | 336.0 | 356.0 | 14.30 |
| 28B-HDS-2 | 44.450 | 27.94 | 30.99 | 15.90 | 124.7 | 130.8 | 37.08 | 7.5/6.0 | 59.56 | 420.0 | 470.0 | 18.00 |
| 32B-HDS-2 | 50.800 | 29.21 | 30.99 | 17.81 | 125.3 | 131.2 | 42.29 | 7.0/6.0 | 58.55 | 520.0 | 544.0 | 21.00 |
| 08B-HDS-3 | 12.700 | 8.51 | 7.75 | 4.45 | 44.9 | 47.5 | 11.81 | 1.60 | 13.92 | 54.0 | 59.4 | 2.15 |
| 10B-HDS-3 | 15.875 | 10.16 | 9.65 | 5.08 | 52.8 | 55.0 | 14.73 | 1.70 | 16.59 | 72.0 | 82.5 | 2.89 |
| 12B-HDS-3 | 19.050 | 12.07 | 11.68 | 5.72 | 61.6 | 63.7 | 16.13 | 1.85 | 19.46 | 90.0 | 101.5 | 3.70 |
| 16B-HDS-3 | 25.400 | 15.88 | 17.02 | 8.28 | 99.7 | 102.8 | 21.08 | 4.0/3.2 | 31.88 | 195.0 | 215.0 | 8.13 |
| 20B-HDS-3 | 31.750 | 19.05 | 19.56 | 10.19 | 114.3 | 119.4 | 26.42 | 4.5/3.5 | 36.45 | 300.0 | 320.0 | 11.50 |
| 24B-HDS-3 | 38.100 | 25.40 | 25.40 | 14.63 | 149.8 | 156.0 | 33.40 | 6.0/4.8 | 48.36 | 504.0 | 520.0 | 21.10 |
| 28B-HDS-3 | 44.450 | 27.94 | 30.99 | 15.90 | 184.3 | 190.3 | 37.08 | 7.5/6.0 | 59.56 | 630.0 | 700.0 | 27.30 |
| 32B-HDS-3 | 50.800 | 29.21 | 30.99 | 17.81 | 183.6 | 189.3 | 42.29 | 7.0/6.0 | 58.55 | 780.0 | 810.0 | 31.56 |





# A系列自润滑滚子链 Sintered Bushing Roller Chains (A Series)

GS38 链条及附件 GS38 Chain and Accessories
S 型钢制农机链及附件 S Type Steel Agricultural Chains and Accessories
A 型钢制农机链及附件 A Type Steel Agricultural Chains and Accessories
C/CA 型钢制农机链及附件 C/CA Type Steel Agricultural Chains and Accessories
水稻收割机链 Rice harvester Chains
夹持链 Clamping Chains
其他农机链及附件 Other Agricultural Chains and Accessories
传动链 Driving Chains

## ■ 单排、双排 Simplex / Duplex

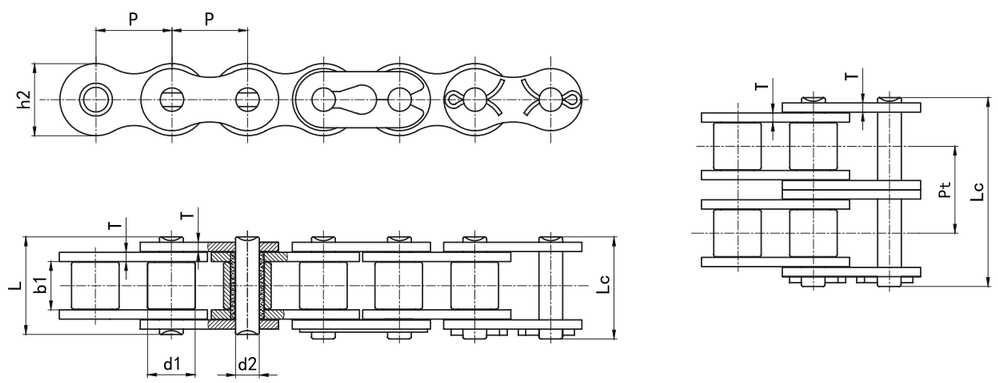


| 征和链号 CHOHO Chain No. | 节距 Pitch | 滚子直径 Roller diameter | 内节内宽 Width between inner plates | 销轴直径 Pin diameter | 销轴长度 Pin length | | 内链板高度 Inner plate depth | 链板厚度 Plate thickness | 排距 Transverse pitch | 抗拉强度 Ultimate tensile strength | 每米重量 Weight per meter |
|---|---|---|---|---|---|---|---|---|---|---|---|
| | P | d1 max | b1 min | d2 max | L max | Lc max | h2 max | T max | Pt | Q min | q |
| | mm | mm | mm | mm | mm | mm | mm | mm | mm | KN | kg/m |
| 40-SL-1 | 12.700 | 7.92 | 7.85 | 3.98 | 16.7 | 18.3 | 12.07 | 1.50 | / | 14.1 | 0.60 |
| 50-SL-1 | 15.875 | 10.16 | 9.40 | 5.09 | 20.7 | 23.8 | 15.09 | 2.00 | / | 22.0 | 1.00 |
| 60-SL-1 | 19.050 | 11.91 | 12.57 | 5.96 | 26.2 | 28.3 | 18.10 | 2.42 | / | 34.2 | 1.46 |
| 80-SL-1 | 25.400 | 15.88 | 15.75 | 7.94 | 32.9 | 36.4 | 24.13 | 3.10 | / | 56.7 | 2.55 |
| 100-SL-1 | 31.750 | 19.05 | 18.90 | 9.54 | 40.8 | 44.1 | 30.17 | 4.00 | / | 88.5 | 3.82 |
| 40-SL-2 | 12.700 | 7.92 | 7.85 | 3.98 | 31.2 | 33.3 | 12.07 | 1.50 | 14.38 | 28.2 | 1.12 |
| 50-SL-2 | 15.875 | 10.16 | 9.40 | 5.09 | 39.1 | 40.6 | 15.09 | 2.00 | 18.11 | 44.0 | 1.96 |
| 60-SL-2 | 19.050 | 11.91 | 12.57 | 5.96 | 49.1 | 50.8 | 18.10 | 2.42 | 22.78 | 68.4 | 2.89 |
| 80-SL-2 | 25.400 | 15.88 | 15.75 | 7.94 | 62.1 | 65.5 | 24.13 | 3.10 | 29.29 | 113.4 | 5.39 |
| 100-SL-2 | 31.750 | 19.05 | 18.90 | 9.54 | 76.6 | 80.5 | 30.17 | 4.00 | 35.76 | 177.0 | 7.72 |

# B系列自润滑滚子链 Sintered Bushing Roller Chains (B Series)



## ■ 单排、双排 Simplex / Duplex

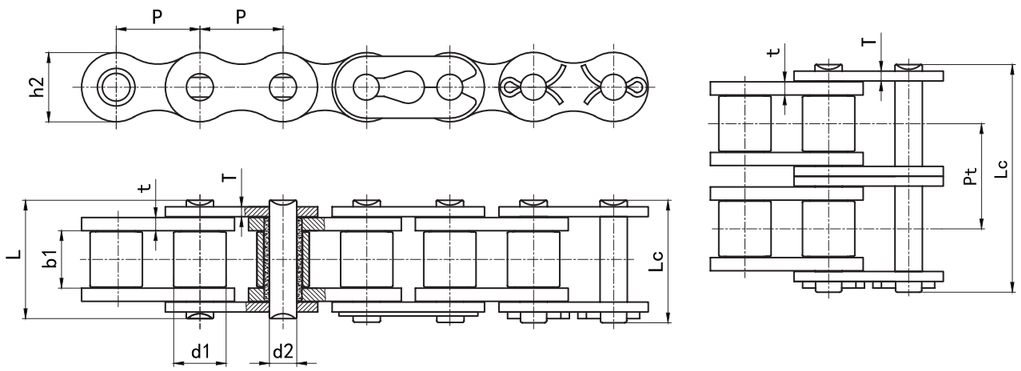


| 征和链号 CHOHO Chain No. | 节距 Pitch P mm | 滚子直径 Roller diameter d1 max mm | 内节内宽 Width between inner plates b1 min mm | 销轴直径 Pin diameter d2 max mm | 销轴长度 Pin length L max mm | 销轴长度 Pin length Lc max mm | 内链板高度 Inner plate depth h2 max mm | 链板厚度 Plate thickness t/T max mm | 排距 Transverse pitch Pt mm | 抗拉强度 Ultimate tensile strength Q min KN | 每米重量 Weight per meter q kg/m |
|---|---|---|---|---|---|---|---|---|---|---|---|
| 08B-SL-1 | 12.700 | 8.51 | 7.75 | 4.45 | 17.0 | 19.2 | 11.81 | 1.60 | / | 18.0 | 0.69 |
| 10B-SL-1 | 15.875 | 10.16 | 9.65 | 5.08 | 19.6 | 22.3 | 14.73 | 1.70 | / | 22.4 | 0.90 |
| 12B-SL-1 | 19.050 | 12.07 | 11.68 | 5.72 | 22.6 | 25.0 | 16.13 | 1.85 | / | 29.0 | 1.10 |
| 16B-SL-1 | 25.400 | 15.88 | 17.02 | 8.28 | 36.1 | 39.2 | 21.08 | 4.0/3.0 | / | 60.0 | 2.67 |
| 20B-SL-1 | 31.750 | 19.05 | 19.56 | 10.19 | 41.4 | 46.5 | 26.42 | 4.5/3.5 | / | 95.0 | 3.67 |
| 24B-SL-1 | 38.100 | 25.40 | 25.40 | 14.63 | 53.4 | 59.9 | 33.40 | 6.0/4.8 | / | 160.0 | 7.02 |
| 28B-SL-1 | 44.450 | 27.94 | 30.99 | 15.90 | 65.1 | 71.5 | 37.08 | 7.5/6.0 | / | 200.0 | 8.40 |
| 32B-SL-1 | 50.800 | 29.21 | 30.99 | 17.81 | 66.8 | 72.5 | 42.29 | 7.0/6.0 | / | 250.0 | 10.15 |
| 08B-SL-2 | 12.700 | 8.51 | 7.75 | 4.45 | 31.0 | 32.7 | 11.81 | 1.60 | 13.92 | 32.0 | 1.30 |
| 10B-SL-2 | 15.875 | 10.16 | 9.65 | 5.08 | 36.2 | 38.3 | 14.73 | 1.70 | 16.59 | 44.5 | 1.82 |
| 12B-SL-2 | 19.050 | 12.07 | 11.68 | 5.72 | 42.0 | 44.4 | 16.13 | 1.85 | 19.46 | 57.8 | 2.28 |
| 16B-SL-2 | 25.400 | 15.88 | 17.02 | 8.28 | 68.0 | 71.2 | 21.08 | 4.0/3.0 | 31.88 | 106.0 | 5.36 |
| 20B-SL-2 | 31.750 | 19.05 | 19.56 | 10.19 | 77.9 | 83.0 | 26.42 | 4.5/3.5 | 36.45 | 170.0 | 7.16 |
| 24B-SL-2 | 38.100 | 25.40 | 25.40 | 14.63 | 101.8 | 108.5 | 33.40 | 6.0/4.8 | 48.36 | 280.0 | 13.32 |
| 28B-SL-2 | 44.450 | 27.94 | 30.99 | 15.90 | 124.7 | 130.8 | 37.08 | 7.5/6.0 | 59.56 | 360.0 | 16.50 |
| 32B-SL-2 | 50.800 | 29.21 | 30.99 | 17.81 | 125.3 | 131.2 | 42.29 | 7.0/6.0 | 58.55 | 450.0 | 20.90 |





# O型密封圈滚子链 O-Ring Roller Chains

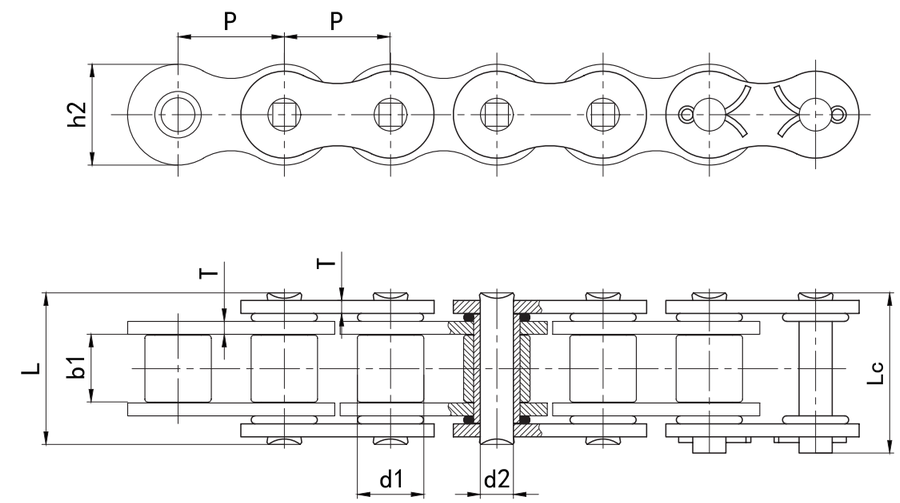


| 征和链号 CHOHO Chain No. | 节距 Pitch P mm | 滚子直径 Roller diameter d1 max mm | 内节内宽 Width between inner plates b1 min mm | 销轴直径 Pin diameter d2 max mm | 销轴长度 Pin length L max mm | 销轴长度 Pin length Lc max mm | 内链板高度 Inner plate depth h2 max mm | 链板厚度 Plate thickness T max mm | 抗拉强度 Ultimate tensile strength Q min KN | 平均抗拉强度 Average tensile strength $Q_0$ KN | 每米重量 Weight per meter q kg/m |
|---|---|---|---|---|---|---|---|---|---|---|---|
| 40RO | 12.7 | 7.92 | 7.85 | 3.98 | 18.3 | 19.6 | 12.07 | 1.50 | 14.1 | 17.9 | 0.67 |
| 50RO | 15.875 | 10.16 | 9.4 | 5.08 | 22.9 | 24.8 | 15.00 | 13.00 | 26.5 | / | 1.26 |
| 60RO | 19.05 | 11.91 | 12.57 | 5.96 | 28.5 | 30.4 | 18.10 | 2.42 | 31.3 | 42.0 | 1.62 |
| 80RO | 25.40 | 15.88 | 15.75 | 7.94 | 35.6 | 37.3 | 24.13 | 3.20 | 56.7 | 72.3 | 2.7 |
| 60HRO | 19.05 | 11.91 | 12.57 | 5.96 | 32.0 | 33.5 | 18.10 | 3.20 | 31.3 | 43.0 | 1.98 |
| 50HTRO | 15.875 | 10.16 | 9.4 | 5.08 | 24.6 | 26.4 | 15.00 | 13.00 | 28 | 35.0 | 1.26 |
| 60HTRO | 19.05 | 11.91 | 12.57 | 5.96 | 32.0 | 33.5 | 18.10 | 3.20 | 35 | 50.0 | 1.98 |
| 80HTRO | 25.4 | 15.88 | 15.75 | 7.94 | 37.6 | 39.0 | 24.13 | 4.00 | 82 | 91.0 | 3.25 |
| 100HTRO | 31.75 | 19.05 | 18.9 | 9.53 | 47.7 | 51.1 | 30.1 | 4.8 | 99.2 | 130.2 | 4.82 |
| 16BRO | 25.4 | 15.88 | 17.02 | 8.28 | 39.5 | 42.9 | 21 | 3.2/4.0 | 60 | 82.8 | 2.85 |

## 镀锌链条 Zinc-Plated Chains

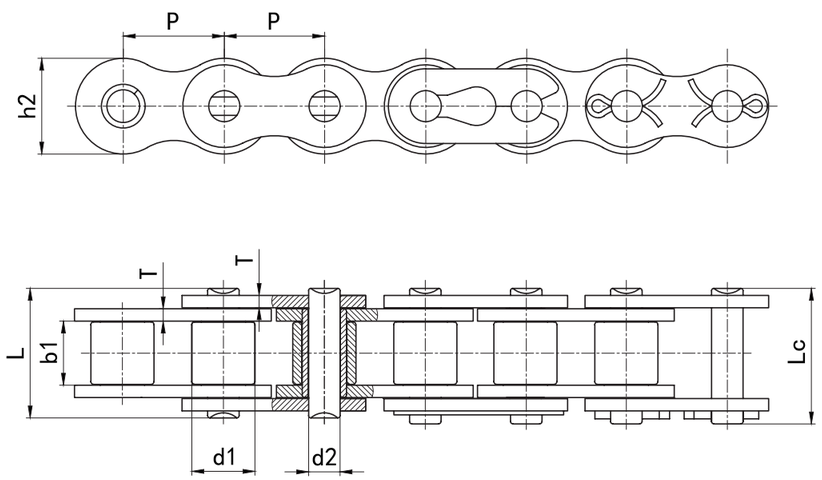


| 征和链号 CHOHO Chain No. | 节距 Pitch | 滚子直径 Roller diameter | 内节内宽 Width between inner plates | 销轴直径 Pin diameter | 销轴长度 Pin length | | 内链板高度 Inner plate depth | 链板厚度 Plate thickness | 抗拉强度 Ultimate tensile strength | 每米重量 Weight per meter |
|---|---|---|---|---|---|---|---|---|---|---|
| | P | d1 max | b1 min | d2 max | L max | Lc max | h2 max | T max | Q min | q |
| | mm | mm | mm | mm | mm | mm | mm | mm | KN | kg/m |
| 41-ZP-1 | 12.700 | 7.77 | 6.25 | 3.60 | 13.7 | 15.5 | 9.91 | 1.20 | 6.7 | 0.40 |
| 40-ZP-1 | 12.700 | 7.92 | 7.85 | 3.98 | 16.7 | 18.3 | 12.07 | 1.50 | 14.1 | 0.65 |
| 50-ZP-1 | 15.875 | 10.16 | 9.40 | 5.09 | 20.7 | 23.8 | 15.09 | 2.00 | 22.2 | 1.03 |
| 60-ZP-1 | 19.050 | 11.91 | 12.57 | 5.96 | 26.2 | 28.3 | 18.10 | 2.42 | 31.5 | 1.51 |
| 80-ZP-1 | 25.400 | 15.88 | 15.75 | 7.94 | 32.9 | 36.4 | 24.13 | 3.10 | 56.7 | 2.61 |
| 100-ZP-1 | 31.750 | 19.05 | 18.90 | 9.54 | 40.8 | 44.1 | 30.17 | 4.00 | 88.5 | 3.90 |
| 120-ZP-1 | 38.100 | 22.23 | 25.22 | 11.11 | 50.8 | 54.7 | 36.20 | 4.80 | 127.0 | 5.60 |
| 140-ZP-1 | 44.450 | 25.40 | 25.22 | 12.71 | 54.7 | 61.0 | 42.23 | 5.60 | 173.0 | 7.52 |
| 160-ZP-1 | 50.800 | 28.58 | 31.55 | 14.29 | 65.5 | 70.0 | 48.26 | 6.40 | 227.0 | 10.08 |
| 08B-ZP-1 | 12.700 | 8.51 | 7.75 | 4.45 | 17.0 | 19.2 | 11.81 | 1.60 | 18.0 | 0.71 |
| 10B-ZP-1 | 15.875 | 10.16 | 9.65 | 5.08 | 19.6 | 22.3 | 14.73 | 1.70 | 22.4 | 0.93 |
| 12B-ZP-1 | 19.050 | 12.07 | 11.68 | 5.72 | 22.6 | 25.0 | 16.13 | 1.85 | 29.1 | 1.13 |
| 16B-ZP-1 | 25.400 | 15.88 | 17.02 | 8.28 | 36.1 | 39.2 | 21.08 | 4.0/3.0 | 60.0 | 2.72 |
| 20B-ZP-1 | 31.750 | 19.05 | 19.56 | 10.19 | 41.4 | 46.5 | 26.42 | 4.5/3.5 | 95.0 | 3.72 |
| 24B-ZP-1 | 38.100 | 25.40 | 25.40 | 14.63 | 53.4 | 59.9 | 33.40 | 6.0/4.8 | 160.0 | 7.10 |
| 28B-ZP-1 | 44.450 | 27.94 | 30.99 | 15.90 | 65.1 | 71.5 | 37.08 | 7.5/6.0 | 200.0 | 8.50 |
| 32B-ZP-1 | 50.800 | 29.21 | 30.99 | 17.81 | 66.8 | 72.5 | 42.29 | 7.0/6.0 | 250.0 | 10.25 |



## 镀镍链条 Nickel-Plated Chains

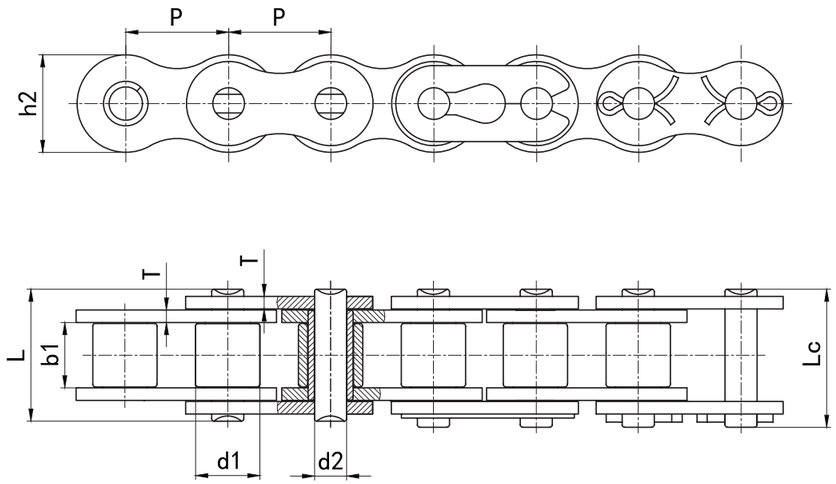


| 征和链号 CHOHO Chain No. | 节距 Pitch | 滚子直径 Roller diameter | 内节内宽 Width between inner plates | 销轴直径 Pin diameter | 销轴长度 Pin length | | 内链板高度 Inner plate depth | 链板厚度 Plate thickness | 抗拉强度 Ultimate tensile strength | 每米重量 Weight per meter |
|---|---|---|---|---|---|---|---|---|---|---|
| | P | d1 max | b1 min | d2 max | L max | Lc max | h2 max | T max | Q min | q |
| | mm | mm | mm | mm | mm | mm | mm | mm | KN | kg/m |
| 41-NP-1 | 12.700 | 7.77 | 6.25 | 3.60 | 13.7 | 15.5 | 9.91 | 1.20 | 6.7 | 0.40 |
| 40-NP-1 | 12.700 | 7.92 | 7.85 | 3.98 | 16.7 | 18.3 | 12.07 | 1.50 | 14.1 | 0.65 |
| 50-NP-1 | 15.875 | 10.16 | 9.40 | 5.09 | 20.7 | 23.8 | 15.09 | 2.00 | 22.2 | 1.03 |
| 60-NP-1 | 19.050 | 11.91 | 12.57 | 5.96 | 26.2 | 28.3 | 18.10 | 2.42 | 31.5 | 1.51 |
| 80-NP-1 | 25.400 | 15.88 | 15.75 | 7.94 | 32.9 | 36.4 | 24.13 | 3.10 | 56.7 | 2.61 |
| 100-NP-1 | 31.750 | 19.05 | 18.90 | 9.54 | 40.8 | 44.1 | 30.17 | 4.00 | 88.5 | 3.90 |
| 120-NP-1 | 38.100 | 22.23 | 25.22 | 11.11 | 50.8 | 54.7 | 36.20 | 4.80 | 127.0 | 5.60 |
| 140-NP-1 | 44.450 | 25.40 | 25.22 | 12.71 | 54.7 | 61.0 | 42.23 | 5.60 | 173.0 | 7.52 |
| 160-NP-1 | 50.800 | 28.58 | 31.55 | 14.29 | 65.5 | 70.0 | 48.26 | 6.40 | 227.0 | 10.08 |
| 08B-NP-1 | 12.700 | 8.51 | 7.75 | 4.45 | 17.0 | 19.2 | 11.81 | 1.60 | 18.0 | 0.71 |
| 10B-NP-1 | 15.875 | 10.16 | 9.65 | 5.08 | 19.6 | 22.3 | 14.73 | 1.70 | 22.4 | 0.93 |
| 12B-NP-1 | 19.050 | 12.07 | 11.68 | 5.72 | 22.6 | 25.0 | 16.13 | 1.85 | 29.1 | 1.13 |
| 16B-NP-1 | 25.400 | 15.88 | 17.02 | 8.28 | 36.1 | 39.2 | 21.08 | 4.0/3.0 | 60.0 | 2.72 |
| 20B-NP-1 | 31.750 | 19.05 | 19.56 | 10.19 | 41.4 | 46.5 | 26.42 | 4.5/3.5 | 95.0 | 3.72 |
| 24B-NP-1 | 38.100 | 25.40 | 25.40 | 14.63 | 53.4 | 59.9 | 33.40 | 6.0/4.8 | 160.0 | 7.10 |
| 28B-NP-1 | 44.450 | 27.94 | 30.99 | 15.90 | 65.1 | 71.5 | 37.08 | 7.5/6.0 | 200.0 | 8.50 |
| 32B-NP-1 | 50.800 | 29.21 | 30.99 | 17.81 | 66.8 | 72.5 | 42.29 | 7.0/6.0 | 250.0 | 10.25 |

# 表面涂层滚子链 Surface Coating Roller Chains



## 镀达克罗链条 Dacromet Chain

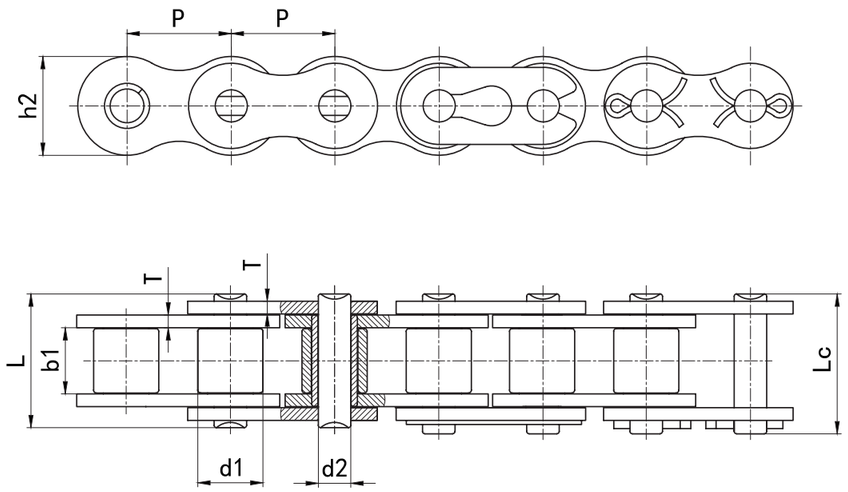


| 征和链号 CHOHO Chain No. | 节距 Pitch P mm | 滚子直径 Roller diameter d1 max mm | 内节内宽 Width between inner plates b1 min mm | 销轴直径 Pin diameter d2 max mm | 销轴长度 Pin length L max mm | 销轴长度 Pin length Lc max mm | 内链板高度 Inner plate depth h2 max mm | 链板厚度 Plate thickness T max mm | 抗拉强度 Ultimate tensile strength Q min KN | 每米重量 Weight per meter q kg/m |
|---|---|---|---|---|---|---|---|---|---|---|
| 41-DR-1 | 12.700 | 7.77 | 6.25 | 3.60 | 13.7 | 15.5 | 9.91 | 1.20 | 6.7 | 0.40 |
| 40-DR-1 | 12.700 | 7.92 | 7.85 | 3.98 | 16.7 | 18.3 | 12.07 | 1.50 | 14.1 | 0.65 |
| 50-DR-1 | 15.875 | 10.16 | 9.40 | 5.09 | 20.7 | 23.8 | 15.09 | 2.00 | 22.2 | 1.03 |
| 60-DR-1 | 19.050 | 11.91 | 12.57 | 5.96 | 26.2 | 28.3 | 18.10 | 2.42 | 31.5 | 1.51 |
| 80-DR-1 | 25.400 | 15.88 | 15.75 | 7.94 | 32.9 | 36.4 | 24.13 | 3.10 | 56.7 | 2.61 |
| 100-DR-1 | 31.750 | 19.05 | 18.90 | 9.54 | 40.8 | 44.1 | 30.17 | 4.00 | 88.5 | 3.90 |
| 120-DR-1 | 38.100 | 22.23 | 25.22 | 11.11 | 50.8 | 54.7 | 36.20 | 4.80 | 127.0 | 5.60 |
| 140-DR-1 | 44.450 | 25.40 | 25.22 | 12.71 | 54.7 | 61.0 | 42.23 | 5.60 | 173.0 | 7.52 |
| 160-DR-1 | 50.800 | 28.58 | 31.55 | 14.29 | 65.5 | 70.0 | 48.26 | 6.40 | 227.0 | 10.08 |
| 08B-DR-1 | 12.700 | 8.51 | 7.75 | 4.45 | 17.0 | 19.2 | 11.81 | 1.60 | 18.0 | 0.71 |
| 10B-DR-1 | 15.875 | 10.16 | 9.65 | 5.08 | 19.6 | 22.3 | 14.73 | 1.70 | 22.4 | 0.93 |
| 12B-DR-1 | 19.050 | 12.07 | 11.68 | 5.72 | 22.6 | 25.0 | 16.13 | 1.85 | 29.1 | 1.13 |
| 16B-DR-1 | 25.400 | 15.88 | 17.02 | 8.28 | 36.1 | 39.2 | 21.08 | 4.0/3.0 | 60.0 | 2.72 |
| 20B-DR-1 | 31.750 | 19.05 | 19.56 | 10.19 | 41.4 | 46.5 | 26.42 | 4.5/3.5 | 95.0 | 3.72 |
| 24B-DR-1 | 38.100 | 25.40 | 25.40 | 14.63 | 53.4 | 59.9 | 33.40 | 6.0/4.8 | 160.0 | 7.10 |
| 28B-DR-1 | 44.450 | 27.94 | 30.99 | 15.90 | 65.1 | 71.5 | 37.08 | 7.5/6.0 | 200.0 | 8.50 |
| 32B-DR-1 | 50.800 | 29.21 | 30.99 | 17.81 | 66.8 | 72.5 | 42.29 | 7.0/6.0 | 250.0 | 10.25 |





# A系列直板输送链条 Straight Side Plate Conveyor Chains (A Series)



## 单排、双排、三排 Simplex / Duplex/ Triplex

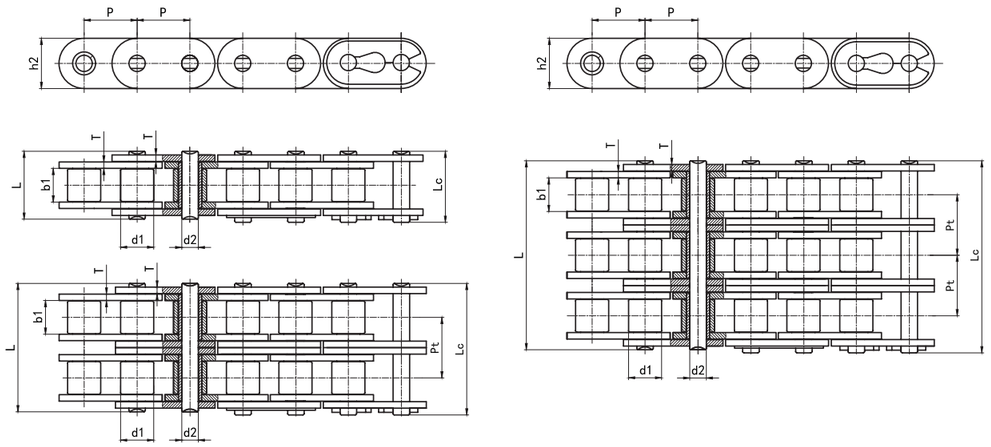


| DIN 链号 DIN Chain No. | ISO/ ANSI 链号 ISO/ ANSI Chain No. | 节距 Pitch P mm | 滚子直径 Roller diameter d1 max mm | 内节内宽 Width between inner plates b1 min mm | 销轴直径 Pin diameter d2 max mm | 销轴长度 Pin length L max mm | 销轴长度 Pin length Lc max mm | 内链板高度 Inner plate depth h2 max mm | 链板厚度 Plate thickness T max mm | 排距 Transverse pitch Pt mm | 抗拉强度 Ultimate tensile strength Q mix kN/LB | 平均抗拉强度 Average tensile strength $Q_0$ kN | 每米重量 Weight per meter q kg/m |
|---|---|---|---|---|---|---|---|---|---|---|---|---|---|
| C08A-1 | C40-1 | 12.700 | 7.92 | 7.85 | 3.98 | 16.7 | 18.3 | 12.07 | 1.50 | / | 13.9 | 18.0 | 0.78 |
| C10A-1 | C50-1 | 15.875 | 10.16 | 9.40 | 5.09 | 20.7 | 23.8 | 15.09 | 2.00 | / | 21.8 | 29.8 | 1.27 |
| C12A-1 | C60-1 | 19.050 | 11.91 | 12.57 | 5.96 | 26.2 | 28.3 | 18.10 | 2.42 | / | 31.3 | 42.5 | 1.81 |
| C16A-1 | C80-1 | 25.400 | 15.88 | 15.75 | 7.94 | 32.9 | 36.4 | 24.13 | 3.20 | / | 55.6 | 73.5 | 3.03 |
| C20A-1 | C100-1 | 31.750 | 19.05 | 18.90 | 9.54 | 40.8 | 44.1 | 30.17 | 4.00 | / | 87.0 | 111.0 | 4.51 |
| C24A-1 | C120-1 | 38.100 | 22.23 | 25.22 | 11.11 | 50.8 | 54.7 | 36.20 | 4.80 | / | 125.0 | 158.0 | 6.63 |
| C28A-1 | C140-1 | 44.450 | 25.40 | 25.22 | 12.71 | 54.7 | 61.0 | 42.23 | 5.60 | / | 170.0 | 124.0 | 8.52 |
| C32A-1 | C160-1 | 50.800 | 28.58 | 31.55 | 14.29 | 65.5 | 70.0 | 48.26 | 6.40 | / | 223.0 | 280.0 | 11.48 |
| C08A-2 | C40-2 | 12.700 | 7.92 | 7.85 | 3.98 | 31.2 | 33.3 | 12.07 | 1.50 | 14.38 | 27.8 | 36.0 | 1.43 |
| C10A-2 | C50-2 | 15.875 | 10.16 | 9.40 | 5.09 | 39.1 | 40.6 | 15.09 | 2.00 | 18.11 | 43.6 | 58.5 | 2.42 |
| C12A-2 | C60-2 | 19.050 | 11.91 | 12.57 | 5.96 | 49.1 | 50.8 | 18.10 | 2.42 | 22.78 | 62.6 | 83.5 | 3.58 |
| C16A-2 | C80-2 | 25.400 | 15.88 | 15.75 | 7.94 | 62.1 | 65.5 | 24.13 | 3.20 | 29.29 | 111.2 | 143.0 | 6.15 |
| C20A-2 | C100-2 | 31.750 | 19.05 | 18.90 | 9.54 | 76.6 | 80.5 | 30.17 | 4.00 | 35.76 | 174.0 | 221.0 | 9.08 |
| C24A-2 | C120-2 | 38.100 | 22.23 | 25.22 | 11.11 | 96.3 | 100.2 | 36.20 | 4.80 | 45.44 | 250.0 | 315.5 | 13.62 |
| C28A-2 | C140-2 | 44.450 | 25.40 | 25.22 | 12.71 | 103.6 | 110.1 | 42.23 | 5.60 | 48.87 | 340.0 | 429.0 | 16.85 |
| C32A-2 | C160-2 | 50.800 | 28.58 | 31.55 | 14.29 | 124.1 | 128.6 | 48.26 | 6.40 | 58.55 | 446.0 | 563.0 | 22.90 |
| C08A-3 | C40-3 | 12.700 | 7.92 | 7.85 | 3.98 | 45.5 | 47.1 | 12.07 | 1.50 | 14.38 | 41.7 | 50.8 | 2.14 |
| C10A-3 | C50-3 | 15.875 | 10.16 | 9.40 | 5.09 | 56.9 | 58.3 | 15.09 | 2.00 | 18.11 | 65.4 | 78.0 | 3.62 |
| C12A-3 | C60-3 | 19.050 | 11.91 | 12.57 | 5.96 | 71.8 | 73.6 | 18.10 | 2.42 | 22.78 | 93.9 | 113.0 | 5.36 |
| C16A-3 | C80-3 | 25.400 | 15.88 | 15.75 | 7.94 | 91.8 | 95.1 | 24.13 | 3.20 | 29.29 | 166.8 | 200.0 | 9.10 |
| C20A-3 | C100-3 | 31.750 | 19.05 | 18.90 | 9.54 | 112.1 | 116.7 | 30.17 | 4.00 | 35.76 | 261.0 | 311.0 | 13.60 |
| C24A-3 | C120-3 | 38.100 | 22.23 | 25.22 | 11.11 | 141.3 | 145.2 | 36.20 | 4.80 | 45.44 | 375.0 | 440.0 | 20.43 |
| C28A-3 | C140-3 | 44.450 | 25.40 | 25.22 | 12.71 | 152.0 | 157.9 | 42.23 | 5.60 | 48.87 | 510.0 | 598.0 | 25.23 |
| C32A-3 | C160-3 | 50.800 | 28.58 | 31.55 | 14.29 | 181.8 | 186.3 | 48.26 | 6.40 | 58.55 | 669.0 | 784.0 | 34.19 |

# B 系列直板输送链条 Straight Side Plate Conveyor Chains (B Series)



## ■ 单排、双排、三排 Simplex / Duplex/ Triplex

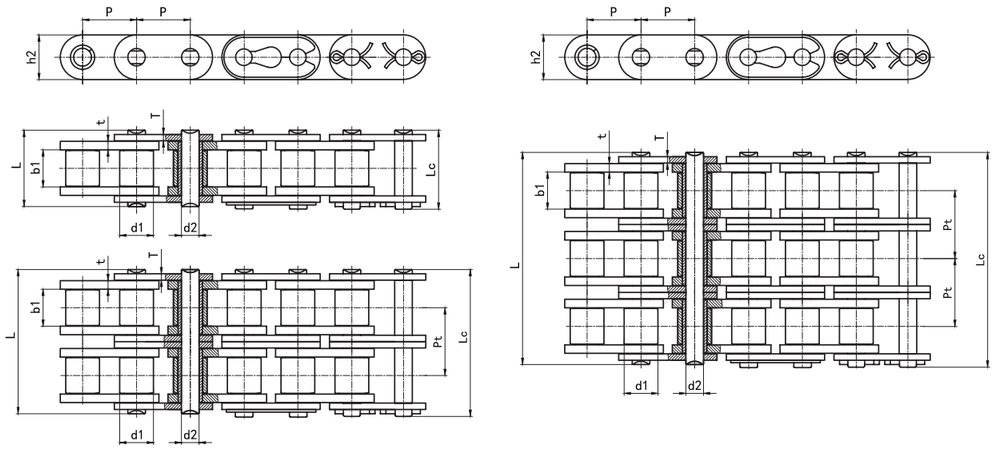


| ISO/DIN 链号 | 节距 | 滚子直径 | 内节内宽 | 销轴直径 | 销轴长度 | | 内链板高度 | 链板厚度 | 排距 | 抗拉强度 | 平均抗拉强度 | 每米重量 |
|---|---|---|---|---|---|---|---|---|---|---|---|---|
| | Pitch | Roller diameter | Width between inner plates | Pin diameter | Pin length | | Inner plate depth | Plate thickness | Transverse pitch | Ultimate tensile strength | Average tensile strength | Weight per meter |
| ISO/DIN Chain No. | P | d1 max | b1 min | d2 max | L max | Lc max | h2 max | t/T max | Pt | Q min | $Q_0$ | q |
| | mm | mm | mm | mm | mm | mm | mm | mm | mm | KN | KN | kg/m |
| C08B-1 | 12.700 | 8.51 | 7.75 | 4.45 | 17.0 | 19.2 | 11.81 | 1.60 | / | 17.8 | 20.0 | 0.80 |
| C10B-1 | 15.875 | 10.16 | 9.65 | 5.08 | 19.6 | 22.3 | 14.73 | 1.70 | / | 22.2 | 28.0 | 1.06 |
| C12B-1 | 19.050 | 12.07 | 11.68 | 5.72 | 22.6 | 25.0 | 16.13 | 1.85 | / | 28.9 | 33.0 | 1.32 |
| C16B-1 | 25.400 | 15.88 | 17.02 | 8.28 | 36.1 | 39.2 | 21.08 | 4.0/3.0 | / | 60.0 | 73.5 | 3.08 |
| C20B-1 | 31.750 | 19.05 | 19.56 | 10.19 | 41.4 | 46.5 | 26.42 | 4.5/3.5 | / | 95.0 | 107.0 | 4.16 |
| C24B-1 | 38.100 | 25.40 | 25.40 | 14.63 | 53.4 | 59.9 | 33.40 | 6.0/4.8 | / | 160.0 | 180.0 | 7.47 |
| C28B-1 | 44.450 | 27.94 | 30.99 | 15.90 | 65.1 | 71.5 | 37.08 | 7.5/6.0 | / | 200.0 | 221.0 | 9.90 |
| C32B-1 | 50.800 | 29.21 | 30.99 | 17.81 | 66.8 | 72.5 | 42.29 | 7.0/6.0 | / | 250.0 | 279.0 | 10.45 |
| C08B-2 | 12.700 | 8.51 | 7.75 | 4.45 | 31.0 | 32.7 | 11.81 | 1.60 | 13.92 | 31.1 | 39.0 | 1.45 |
| C10B-2 | 15.875 | 10.16 | 9.65 | 5.08 | 36.2 | 38.3 | 14.73 | 1.70 | 16.59 | 44.5 | 56.0 | 2.00 |
| C12B-2 | 19.050 | 12.07 | 11.68 | 5.72 | 42.0 | 44.4 | 16.13 | 1.85 | 19.46 | 57.8 | 67.0 | 2.62 |
| C16B-2 | 25.400 | 15.88 | 17.02 | 8.28 | 68.0 | 71.2 | 21.08 | 4.0/3.0 | 31.88 | 106.0 | 134.0 | 6.10 |
| C20B-2 | 31.750 | 19.05 | 19.56 | 10.19 | 77.9 | 83.0 | 26.42 | 4.5/3.5 | 36.45 | 170.0 | 211.0 | 8.23 |
| C24B-2 | 38.100 | 25.40 | 25.40 | 14.63 | 101.8 | 108.5 | 33.40 | 6.0/4.8 | 48.36 | 280.0 | 319.0 | 14.77 |
| C28B-2 | 44.450 | 27.94 | 30.99 | 15.90 | 124.7 | 130.8 | 37.08 | 7.5/6.0 | 59.56 | 360.0 | 405.0 | 19.82 |
| C32B-2 | 50.800 | 29.21 | 30.99 | 17.81 | 125.3 | 131.2 | 42.29 | 7.0/6.0 | 58.55 | 450.0 | 508.0 | 20.95 |
| C08B-3 | 12.700 | 8.51 | 7.75 | 4.45 | 44.9 | 47.5 | 11.81 | 1.60 | 13.92 | 44.5 | 57.0 | 2.10 |
| C10B-3 | 15.875 | 10.16 | 9.65 | 5.08 | 52.8 | 55.0 | 14.73 | 1.70 | 16.59 | 66.7 | 83.0 | 2.87 |
| C12B-3 | 19.050 | 12.07 | 11.68 | 5.72 | 61.6 | 63.7 | 16.13 | 1.85 | 19.46 | 86.7 | 102.0 | 3.89 |
| C16B-3 | 25.400 | 15.88 | 17.02 | 8.28 | 99.7 | 102.8 | 21.08 | 4.0/3.0 | 31.88 | 160.0 | 196.0 | 9.12 |
| C20B-3 | 31.750 | 19.05 | 19.56 | 10.19 | 114.3 | 119.4 | 26.42 | 4.5/3.5 | 36.45 | 250.0 | 288.0 | 11.35 |
| C24B-3 | 38.100 | 25.40 | 25.40 | 14.63 | 149.8 | 156.0 | 33.40 | 6.0/4.8 | 48.36 | 425.0 | 492.0 | 22.10 |
| C28B-3 | 44.450 | 27.94 | 30.99 | 15.90 | 184.3 | 190.3 | 37.08 | 7.5/6.0 | 59.56 | 530.0 | 607.0 | 29.65 |
| C32B-3 | 50.800 | 29.21 | 30.99 | 17.81 | 183.6 | 189.3 | 42.29 | 7.0/6.0 | 58.55 | 670.0 | 772.0 | 31.27 |





# 双节距输送链 Double Pitch Conveyor Chains

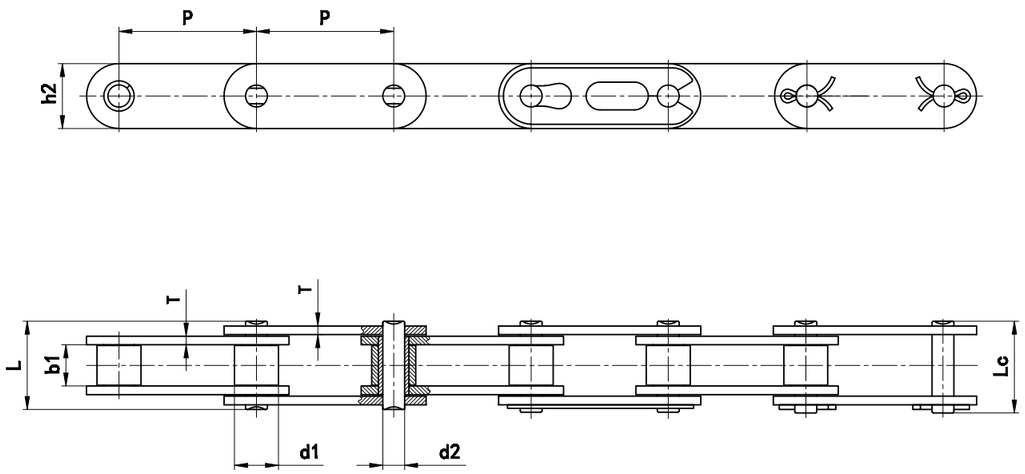


| ISO 链号 | ANSI 链号 | 节距 | 滚子直径 | 内节内宽 | 销轴直径 | 销轴长度 | | 内链板高度 | 链板厚度 | 抗拉强度 | 平均抗拉强度 | 每米重量 |
|---|---|---|---|---|---|---|---|---|---|---|---|---|
| | | Pitch | Roller diameter | Width between inner plates | Pin diameter | Pin length | | Inner plate depth | Plate thickness | Ultimate tensile strength | Average tensile strength | Weight per meter |
| ISO Chain No. | ANSI Chain No. | P | d1 max | b1 min | d2 max | L max | Lc max | h2 max | T max | Q min | $Q_0$ | q |
| | | mm | mm | mm | mm | mm | mm | mm | mm | KN | KN | kg/m |
| C208A | C2040 | 25.40 | 7.92 | 7.85 | 3.98 | 16.7 | 18.3 | 12.07 | 1.50 | 13.9 | 17.9 | 0.50 |
| C208AL | C2042 | | 15.88 | | | | | | | | | 0.84 |
| C208AH | C2040H | 25.40 | 7.92 | 7.85 | 3.98 | 18.8 | 20.0 | 12.07 | 2.00 | 13.9 | 19.2 | 0.65 |
| C210A | C2050 | 31.75 | 10.16 | 9.40 | 5.09 | 20.7 | 23.8 | 15.09 | 2.00 | 21.8 | 29.3 | 0.78 |
| C210AL | C2052 | | 19.05 | | | | | | | | | 1.27 |
| C212A | C2060 | 38.10 | 11.91 | 12.57 | 5.96 | 26.2 | 28.3 | 18.10 | 2.42 | 31.3 | 42.0 | 1.12 |
| C212AL | C2062 | | 22.23 | | | | | | | | | 1.61 |
| C212AH | C2060H | 38.10 | 11.91 | 12.57 | 5.96 | 30.0 | 32.3 | 18.10 | 3.20 | 31.3 | 42.5 | 1.44 |
| C212AHL | C2062H | | 22.23 | | | | | | | | | 2.07 |
| C216A | C2080 | 50.80 | 15.88 | 15.75 | 7.94 | 33.1 | 35.9 | 24.13 | 3.20 | 55.6 | 72.3 | 2.08 |
| C216AL | C2082 | | 28.58 | | | | | | | | | 3.12 |
| C216AH | C2080H | 50.80 | 15.88 | 15.75 | 7.94 | 36.8 | 40.5 | 24.13 | 4.00 | 55.6 | 72.5 | 2.54 |
| C216AHL | C2082H | | 28.58 | | | | | | | | | 3.58 |
| C220A | C2100 | 63.50 | 19.05 | 18.90 | 9.54 | 40.8 | 44.1 | 30.17 | 4.00 | 87.0 | 110.5 | 3.01 |
| C220AL | C2102 | | 39.67 | | | | | | | | | 4.83 |
| C220AH | C2100H | 63.50 | 19.05 | 18.90 | 9.54 | 44.2 | 47.6 | 30.17 | 4.80 | 87.0 | 112.0 | 3.56 |
| C220AHL | C2102H | | 39.67 | | | | | | | | | 5.38 |
| C224A | C2120 | 76.20 | 22.23 | 25.22 | 11.11 | 50.8 | 54.7 | 36.20 | 4.80 | 125.0 | 157.0 | 4.66 |
| C224AL | C2122 | | 44.45 | | | | | | | | | 7.66 |
| C224AH | C2120H | 76.20 | 22.23 | 25.22 | 11.11 | 54.5 | 58.2 | 36.20 | 5.60 | 125.0 | 160.0 | 5.26 |
| C224AHL | C2122H | | 44.45 | | | | | | | | | 8.26 |
| C232A | C2160 | 101.60 | 28.58 | 31.55 | 14.29 | 65.5 | 70.0 | 48.26 | 6.40 | 223.0 | 279.0 | 8.15 |
| C232AL | C2162 | | 57.15 | | | | | | | | | 13.00 |
| C232AH | C2160H | 101.60 | 28.58 | 31.55 | 14.29 | 68.9 | 73.4 | 48.26 | 7.20 | 223.0 | 285.0 | 9.06 |
| C232AHL | C2162H | | 57.15 | | | | | | | | | 13.84 |

CHOHO

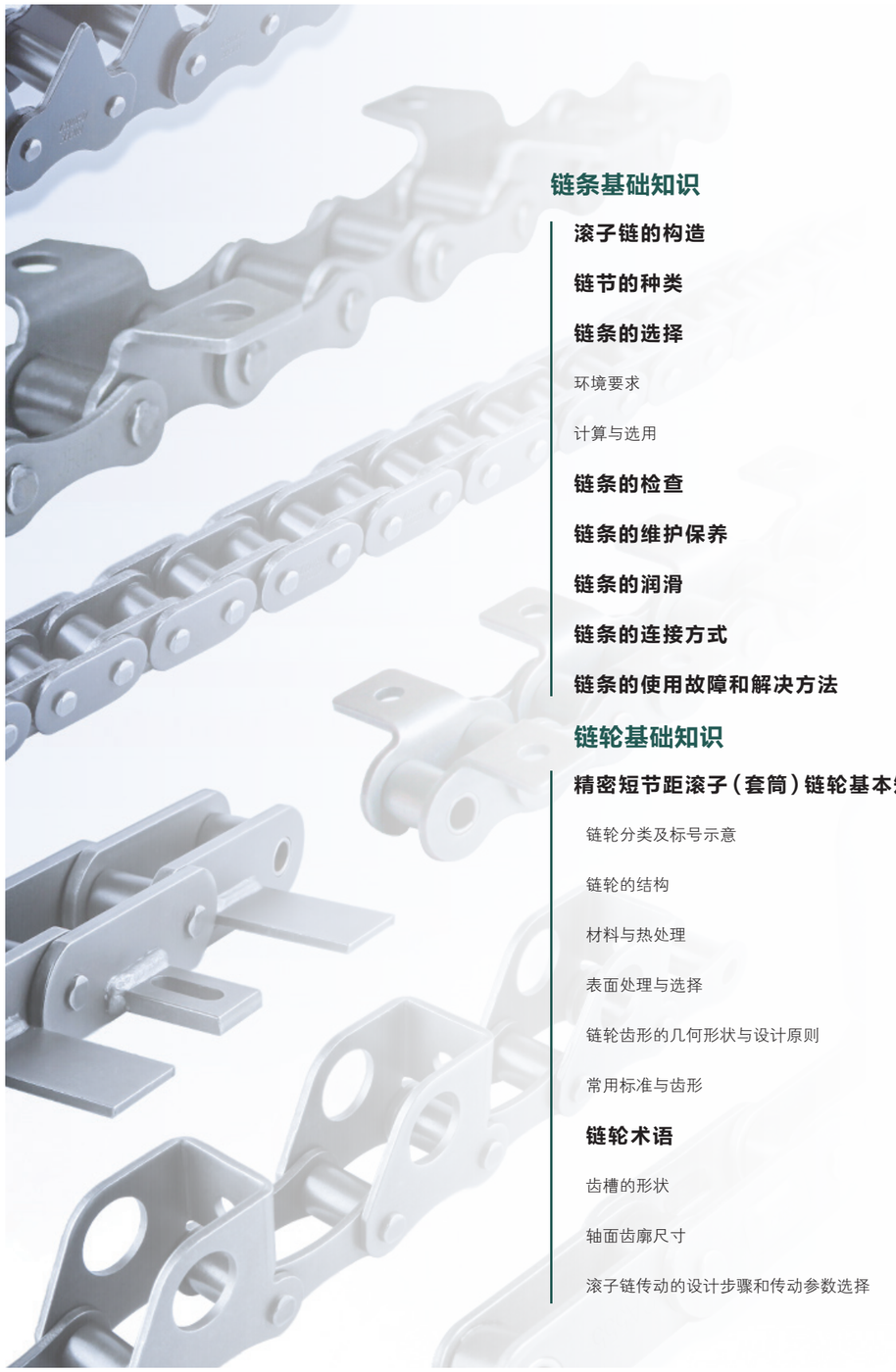

## 链条基础知识



## 链轮基础知识

**精密短节距滚子（套筒）链轮基本知识**



# 滚子链的构造

Construction of roller chain

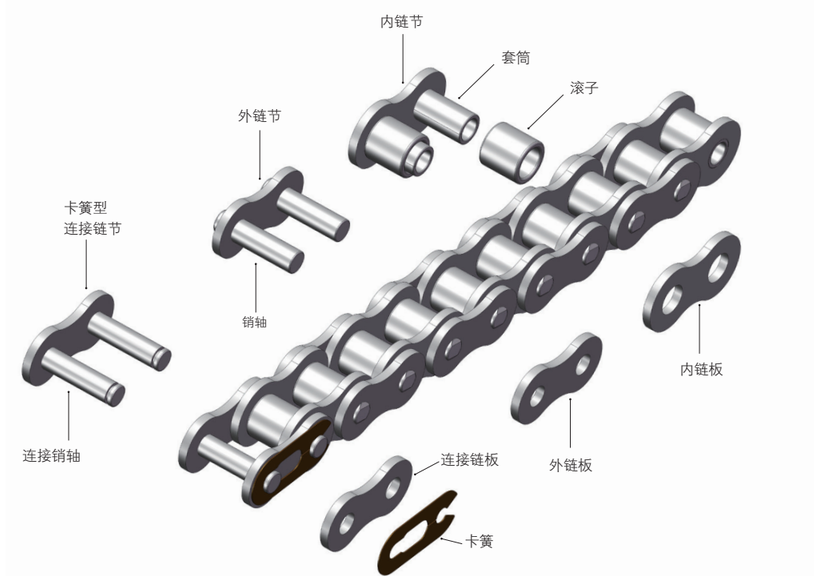


# 链节的种类

Type of link

滚子链一般由多个链节连接成环形或者固定末端使用，不论是哪种都需要连接链节。而且，当滚子链为奇数链节时，虽然可以使用过渡链节，但是因为可能会导致传动能力、最大容许张力下降，所以请尽可能设计为偶数链节。还有，一般情况下，连接链节、过渡链节上仅涂抹防锈油。组装到本体上时，请在销轴、套筒上涂抹足够的润滑油。

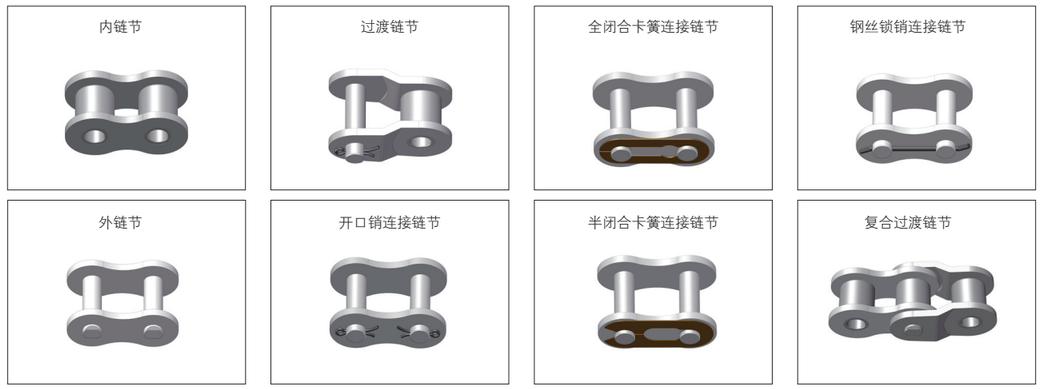

CHOHO

## 环境要求

由于机械设备的工作环境复杂，在链传动的选择方面必须根据工况来选择适当的组成材料及其硬度。具体如下：

### 抗磨损性

■ 有些设备作业时，避免不了会接触到沙、土、秸秆颗粒等杂物，这些颗粒会落入链条套筒和滚子的空隙中以及滚子和链轮的啮合部位，就像研磨砂的磨粒一样，在接触面上就会产生划痕，从而加快了链条及链轮的磨损，缩短了使用寿命。预防的措施有：

1) 在链条的传动机构部分加密封保护罩，防止这些杂物进入到链传动系统。
2) 让链条运行的慢一些，并且减少链与链轮的啮合数量。
3) 使用规格较大的链条或者多排链条以减少承受压力（指套筒与滚子，销轴与套筒之间的压力）。

■ 如果由于某种原因，以上这三种方法都不可行，可以采用下面的措施：

1) 使用轴承钢或者铬钼钢等材料来制造零部件，并且通过热处理硬化措施来提高他们的抗耐磨性能。
2) 当链板受到相当大的磨损时，可以使用硬化钢来作为制造材料。
3) 套筒的磨损率最大，因此可以强加它的厚度以减少承受面的压力，并且使用耐磨钢材作为制造材料。

### 抗疲劳性

由于机械设备作业特殊条件的环境，对链条的抗疲劳性能有较高要求，因此可以考虑使用加重型链条、或者多排链来改善。

### 抗氧化性

对于直接接触到水的链条（例如清洗机链、水稻链等），会发生氧化生锈从而造成链条的逐步磨损，因此用在这种环境中的链条需经过一定的防锈处理措施，或者使用不锈钢或其他具有良好抗水性能的链条用钢。另外，加大铰链部位的间隙，防止铁锈的沉积也是很必要的。

## 计算与选用

### 链条标准运转

■ 链条标准运转的条件，如下：

a) 无半目链节的单排链
b) 主动链轮齿数为 35 齿
c) 安装在水平平行轴上的两链轮传动
d) 工作环境温度在 –5℃ ~ 70℃之间
e) 传动减速比可达 3:1
f) 链条预期使用寿命为 15000h
g) 链长为 120 个链节，若链长小于此长度时，使用寿命将按此比例减小
h) 平稳运转，无过载、冲击或频繁启动
i) 清洁和合适的润滑见“链条传动安装、点检、保养指南”第二项
j) 链轮位置正确对中，链条调节保持正确见“链条传动安装、点检、保养指南”第一项

■ 图 1 和图 2 是在上述条件下建立的链条承载能力图表，给出了各种规格的链条所对应的主动链轮转速 N1 和修正功率 Pc 的曲线。

1) 双排链的额定功率可以用单排链的 Pc*1.75 计算得到。
2) 三排链的额定功率可以用单排链的 Pc*2.5 计算得到。
3) Pc 计算公式如下：

Pc=Pi x F1x F2

（输入功率 Pi 是指主动链轮要传递的功率，若输入扭矩已知，则输入功率 Pi=M x N1 / 9550）

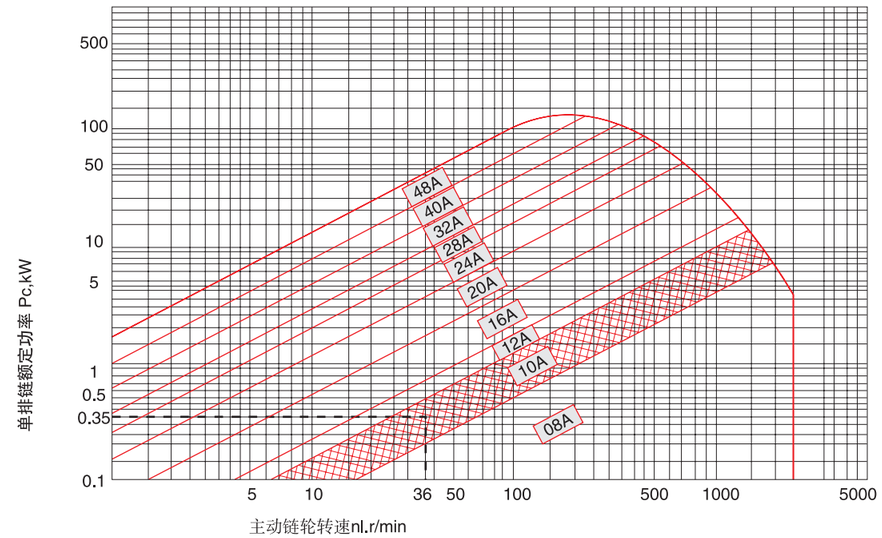


图1 ISO A 系列滚子链承载能力图表

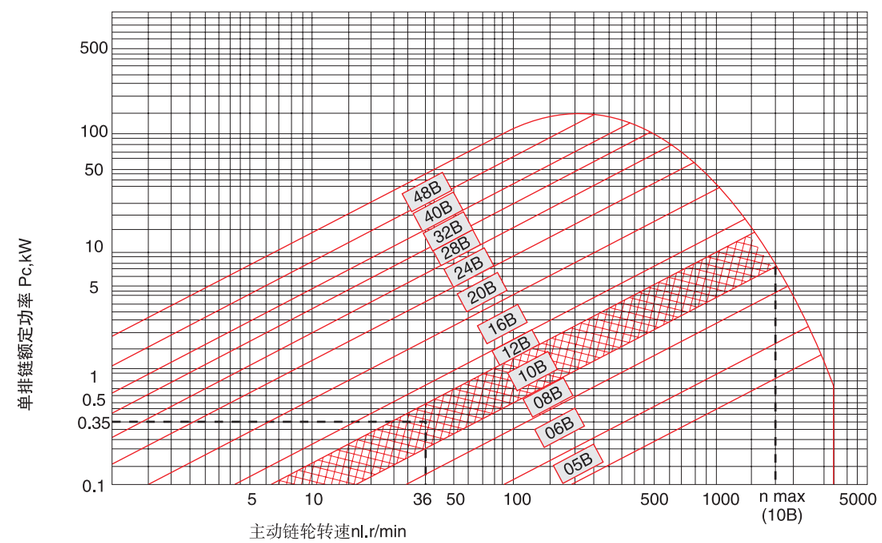


图2 ISO B 系列滚子链承载能力图表

## 其他运转条件

### ■ 工况系数 $F_1$

工况系数 $F_1$ 是考虑动力过载程度的系数，它与链传动的运转条件，特别是与主动和从动机械和特性有关。系数 $F_1$ 值可由表 1 直接查得，或者结合表 2, 表 3 做类比选定。

表 1 工况系数

| 从动机械特性（见表 3） | 主动机械特性（见表 2） | | |
|---|---|---|---|
| | 平稳运转 | 轻微冲击 | 中等冲击 |
| 平稳运转 | 1.0 | 1.1 | 1.3 |
| 中等冲击 | 1.4 | 1.5 | 1.7 |
| 严重冲击 | 1.8 | 1.9 | 2.1 |

表 2 主动机械特性的定义

| | |
|---|---|
| 运转平稳 | 带有液力偶合器的内燃机、电动机、汽轮机和燃气轮机。 |
| 轻微冲击 | 六缸（含）以上带机械式联轴器的内燃机、经常起动的电动机（一日起动两次以上）。 |
| 严重冲击 | 六缸以下带机械式联轴器的内燃机。 |

表 3 从动机械特性的定义

| | |
|---|---|
| 运转平稳 | 离心式的泵和压缩机、印刷机械、均匀加料的带式输送机、纸张压光机、自动扶梯、液体搅拌机和混料机、回转干燥炉、风机。 |
| 中等冲击 | 三缸（含）以上的泵和压缩机、混凝土搅拌机、载荷非恒定的输送机、固体搅拌机和混料机。 |
| 严重冲击 | 刨煤机、电铲、轧机、球磨机、橡胶加工机械、压力机、剪床、单缸或双缸的泵和压缩机、石油钻机。 |

### ■ 齿数系数 $F_1$

齿数系数 $F_2$ 是考虑主动链轮齿数影响的系数，其数值从图 3 中查取。

## 链条选择

■ 从承载能力图（见图 1 和图 2) 按要求传递的功率和小链轮转速，选择节距最小的单排链。

■ 在要求为紧凑的传动布置场合，则可考虑选用节距更小的多排链，这样链轮直径也会减小。

## 链条长度

根据已知的链条节距( P)和初选的中心距( $C_2$)，按下列公式可计算出两链轮传动的链长节数( Ln)。计算出的链长节数 (Ln) 应圆成整数( L)，链长节数选用偶数节，则可以避免使用半目节链。

■ 当两链轮的齿数相等时（Z=Z1=Z2) : $Ln= 2xC_2 / P + Z$

■ 当两链轮的齿数不等时 : $Ln= 2xC_2 / P + (Z_1+Z_2) / 2 + F_3xP/C_2$，式中：$F_3=[ ( Z_2-Z_1 ) / 2 ]^2$, $F_3$ 的计算值见表 4。

## 链条速度

链条的线速度可按下式计算：

$V=N_1xZ_1xP/60000$

图 3 主动链轮齿数系数 $F_2$

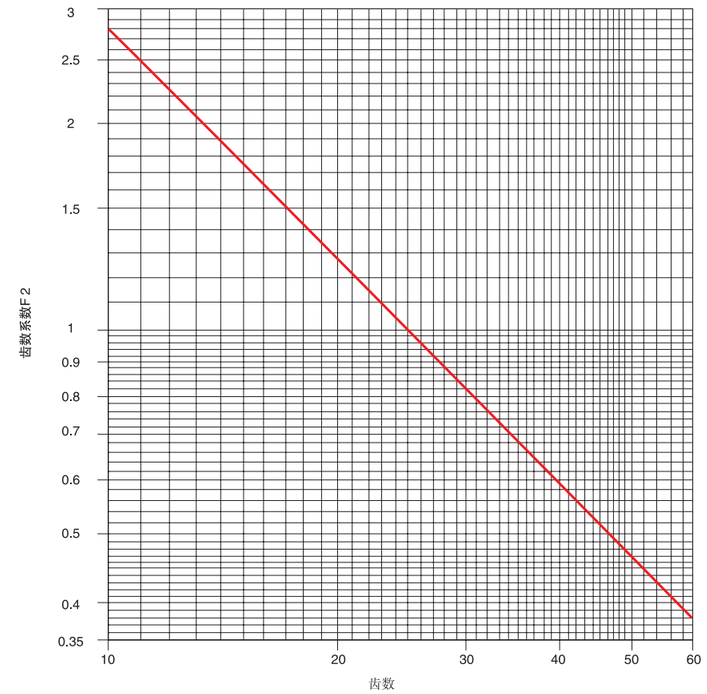


表 4 $F_3$ 的计算

| $Z_2$-$Z_1$ | $F_3$ | $Z_2$-$Z_1$ | $F_3$ | $Z_2$-$Z_1$ | $F_3$ | $Z_2$-$Z_1$ | $F_3$ | $Z_2$-$Z_1$ | $F_3$ |
|---|---|---|---|---|---|---|---|---|---|
| 1 | 0.0253 | 21 | 11.171 | 41 | 42.580 | 61 | 94.254 | 81 | 166.191 |
| 2 | 0.1013 | 22 | 12.260 | 42 | 44.683 | 62 | 97.370 | 82 | 170.320 |
| 3 | 0.2280 | 23 | 13.400 | 43 | 46.836 | 63 | 100.536 | 83 | 174.500 |
| 4 | 0.4053 | 24 | 14.590 | 44 | 49.040 | 64 | 103.753 | 84 | 178.730 |
| 5 | 0.6333 | 25 | 15.831 | 45 | 51.294 | 65 | 107.021 | 85 | 183.011 |
| 6 | 0.912 | 26 | 17.123 | 46 | 53.599 | 66 | 110.339 | 86 | 187.342 |
| 7 | 1.241 | 27 | 18.466 | 47 | 55.955 | 67 | 113.708 | 87 | 191.724 |
| 8 | 1.621 | 28 | 19.859 | 48 | 58.361 | 68 | 117.128 | 88 | 196.157 |
| 9 | 2.052 | 29 | 21.303 | 49 | 60.818 | 69 | 12.598 | 89 | 200.640 |
| 10 | 2.533 | 30 | 22.797 | 50 | 63.326 | 70 | 124.119 | 90 | 205.174 |
| 11 | 3.065 | 31 | 24.342 | 51 | 65.884 | 71 | 127.690 | 91 | 209.759 |
| 12 | 3.648 | 32 | 25.938 | 52 | 68.493 | 72 | 131.313 | 92 | 214.395 |
| 13 | 4.281 | 33 | 27.585 | 53 | 71.153 | 73 | 134.986 | 93 | 219.081 |
| 14 | 4.965 | 34 | 29.282 | 54 | 73.563 | 74 | 138.709 | 94 | 223.817 |
| 15 | 5.699 | 35 | 31.030 | 55 | 76.624 | 75 | 142.483 | 95 | 228.605 |
| 16 | 6.485 | 36 | 32.828 | 56 | 79.436 | 76 | 146.308 | 96 | 233.443 |
| 17 | 7.320 | 37 | 34.677 | 57 | 82.298 | 77 | 150.184 | 97 | 238.333 |
| 18 | 8.207 | 38 | 36.577 | 58 | 85.211 | 78 | 154.110 | 98 | 243.271 |
| 19 | 9.144 | 39 | 38.527 | 59 | 88.175 | 79 | 158.087 | 99 | 248.261 |
| 20 | 10.132 | 40 | 40.529 | 60 | 91.189 | 80 | 162.115 | 100 | 253.302 |

# 链条的检查及维护保养 Chain Inspection and Maintenance

CHOHO

## 最大链轮中心距

根据以上公式确定链条节数（L）后，
按下列公式计算两链轮间的最大中心距（$C_1$）

■ 两链轮的齿数相等时（$Z=Z_1=Z_2$），
$C_1=P\times(L-Z)/2$

■ 两链轮的齿数不等时，
$C_1=F_4\times P\times[2L-(Z_1+Z_2)]$
（F4 的计算值见左表）

| $\frac{L-Z_1}{Z_2-Z_1}$ | $F_4$ | $\frac{L-Z_1}{Z_2-Z_1}$ | $F_4$ | $\frac{L-Z_1}{Z_2-Z_1}$ | $F_4$ |
|---|---|---|---|---|---|
| 13 | 0.249 91 | 2.00 | 0.244 21 | 1.33 | 0.229 68 |
| 12 | 0.249 90 | 1.95 | 0.243 80 | 1.32 | 0.229 12 |
| 11 | 0.249 88 | 1.90 | 0.243 33 | 1.31 | 0.228 54 |
| 10 | 0.249 86 | 1.85 | 0.242 81 | 1.30 | 0.227 93 |
| 9 | 0.249 83 | 1.80 | 0.242 22 | 1.29 | 0.227 29 |
| 8 | 0.249 78 | 1.75 | 0.241 56 | 1.28 | 0.226 62 |
| 7 | 0.249 70 | 1.70 | 0.240 81 | 1.27 | 0.225 93 |
| 6 | 0.249 58 | 1.68 | 0.240 48 | 1.26 | 0.225 20 |
| 5 | 0.249 37 | 1.66 | 0.240 13 | 1.25 | 0.224 43 |
| 4.8 | 0.249 31 | 1.64 | 0.239 77 | 1.24 | 0.223 61 |
| 4.6 | 0.249 25 | 1.62 | 0.239 38 | 1.23 | 0.222 75 |
| 4.4 | 0.249 17 | 1.60 | 0.238 97 | 1.22 | 0.221 85 |
| 4.2 | 0.249 07 | 1.58 | 0.238 54 | 1.21 | 0.220 90 |
| 4.0 | 0.248 96 | 1.56 | 0.238 07 | 1.20 | 0.219 90 |
| 3.8 | 0.248 83 | 1.54 | 0.237 58 | 1.19 | 0.218 84 |
| 3.6 | 0.248 68 | 1.52 | 0.237 05 | 1.18 | 0.217 71 |
| 3.4 | 0.248 49 | 1.50 | 0.236 48 | 1.17 | 0.216 52 |
| 3.2 | 0.248 25 | 1.48 | 0.235 88 | 1.16 | 0.215 26 |
| 3.0 | 0.247 95 | 1.46 | 0.235 24 | 1.15 | 0.213 90 |
| 2.9 | 0.247 78 | 1.44 | 0.234 55 | 1.14 | 0.212 45 |
| 2.8 | 0.247 58 | 1.42 | 0.233 81 | 1.13 | 0.210 90 |
| 2.7 | 0.247 35 | 1.40 | 0.233 01 | 1.12 | 0.209 23 |
| 2.6 | 0.247 08 | 1.39 | 0.232 59 | 1.11 | 0.207 44 |
| 2.5 | 0.246 78 | 1.38 | 0.232 15 | 1.10 | 0.205 49 |
| 2.4 | 0.246 43 | 1.37 | 0.231 70 | 1.09 | 0.203 36 |
| 2.3 | 0.246 02 | 1.36 | 0.231 23 | 1.08 | 0.201 04 |
| 2.2 | 0.245 52 | 1.35 | 0.230 73 | 1.07 | 0.198 48 |
| 2.1 | 0.244 93 | 1.34 | 0.230 22 | 1.06 | 0.195 64 |

## 链条的检查

■ **链条伸长量简易测定方法**

将链条两端拉直，量测方式如右图所示，
量测长度 L=（L1+L2）/ 2
标准长度 Ls = 标准节距 x 测量节数
伸长率 Le =（L–Ls）/ Ls x 100%

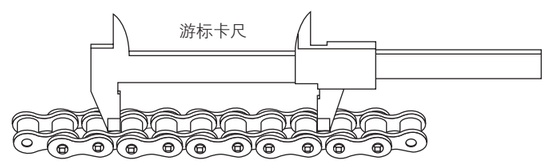


■ **链条伸长的限度**

链条伸长量过大时会造成链条无法顺畅的传动而降低传动效率，因此伸长率越过一定的限度时，必须更换新的链条，见下表。

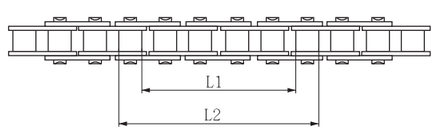


| 链轮齿数 | 伸长率（%） |
|---|---|
| 40 齿以下 | 2.0 |
| 40~60 齿 | 1.5 |
| 60~80 齿 | 1.2 |
| 80~100 齿 | 1.0 |
| 100 齿以上 | 0.8 |

■ **链条的外观检查**

1) 内 / 外链片是否变形、裂缝、锈蚀。
2) 销轴是不变形或转动、锈蚀。
3) 滚子是否裂缝、破坏、过度磨损。
4) 接头是否松脱、变形。
5) 运转时有无异音或不正常的振动，链条润滑状况是否良好。

## 链条的维护保养

■ 正确拆装：安装前要注意使两链轮轴线平行，并且两链轮的旋转平面应位于同一铅垂平面内，否则将引起脱链或者不正常磨损。
安装链条时，应先将链条缠绕在链轮上，再穿入链销。穿入链销时应从内向外穿，以便于从外侧安装联接板并锁紧。拆卸时，取下锁紧片后，可用锤子轻轻轮换敲打同一联接板上的两个联接销，抽出销轴，卸下链条。若链销头已铆头变粗，可磨平后再拆卸。

■ 链轮装在轴上应没有歪斜和摆动。在同一传动组件中两个链轮的端面应位于同一平面内，链轮中心距在 0.5 米以下时，允许偏差 1 毫米；链轮中心距在 0.5 米以上的时，允许偏差 2 毫米。但不允许有摩擦链轮齿侧面现象，如果两轮偏移过大容易产生脱链和加速磨损。在更换链轮时必须注意检查和调整偏移量。

■ 链条的松紧度应适宜，太紧增加功率消耗，轴承易磨损；太松链条易跳动和脱链。链条的松紧程度为：从链条的中部提起或压下，两链轮中心距约为 2% —3%。

■ 链条经过长久使用后伸长，在难以调整的情况下，可看情况拆去链节，但必须为偶数。具体可将要截断连接的销轴以砂轮磨掉铆头部分，下方垫着治具用冲头将销轴打掉，即可拆除链条，具体见下图：

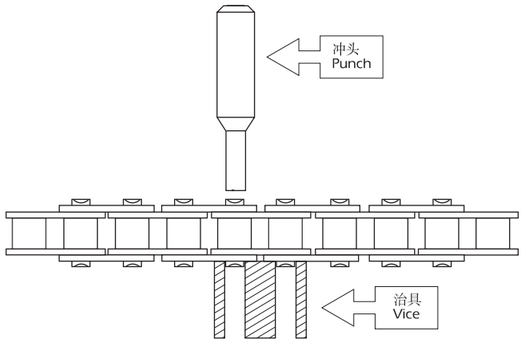


链节应从链条背面穿过，锁片插在外面，
锁紧片的开口应朝转动的相反方向。如下图所示

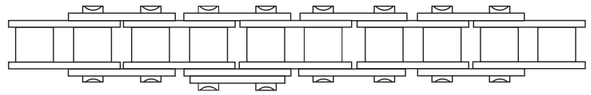

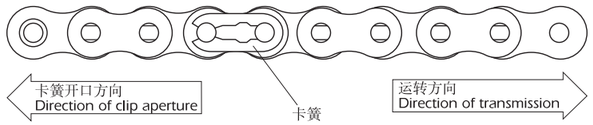

# 链条的润滑 Lubrication of Chain

■ 链轮磨损严重后，应同时更换新链轮和新链条，以保证良好的啮合。不能只单独更换新链条或新链轮，否则会造成啮合不好加速新链条或新链轮的磨损。如右图显示了一个已经磨损的链轮齿部的形状。这样会导致链条附着在链轮上无法顺利的运行，此时可以通过把 A 区部分磨去或翻面使用（指可调面使用的链轮）。连接处的磨损量由链条的尺寸和链速度来决定。当磨损量影响到链传动的正常运行时，就应该采取修正措施或者更换相关部件。

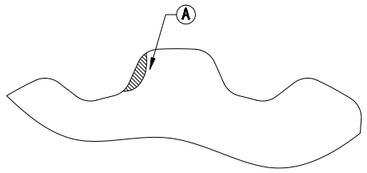


■ 旧链条上不能与部分新链条混合使用，否则容易在传动中产生冲击，拉断链条。

■ 链条在工作中应及时加注润滑油。润滑油必须进入滚子和套筒的配合间隙，以改善工作条件，减少磨损。

■ 机器长期存放时，链条应拆下用煤油或柴油清洗干净，然后涂上机油或黄油存放在干燥处，以防锈蚀。

## 链条的润滑

链条传动的润滑取决于使用场合、温度、链条线速度等。

■ 使用场合影响

开式传动，如各类联合收割机、割晒机等链条应采用油脂润滑。

闭式传动，如手扶拖拉机链条传动箱，应采用机油润滑。

■ 温度影响

一般推荐使用在 -5℃ ~ +60℃范围内使用润滑。

冬季采用粘度小的机油，夏季采用粘度大的机油。

■ 线速度影响

润滑方式直接与链条线速度有关，

具体可以参照右图选择的润滑方式。

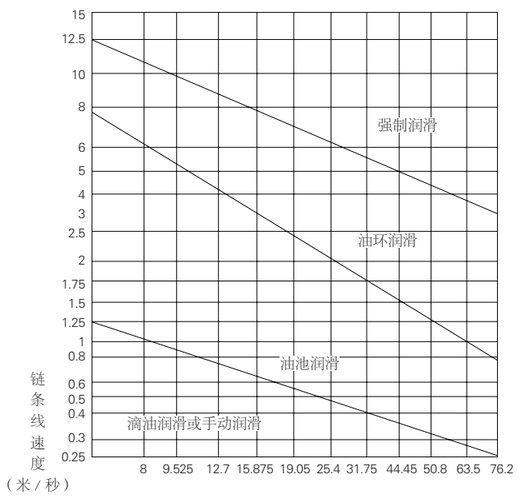






# 链条的连接方式 Attended Mode of Chain

## 连接方式

■ 打卷链条的型号与长度、链节数与连接件的配备关系。

| 链条型号 | 每卷长度（英尺） | 链节数 | 配给连接件数 |
|---|---|---|---|
| 25 | 500 | 24000 | 50 |
| 35、06B | 100 | 3200 | 20 |
| 40、08B | 100 | 1800 | 20 |
| 50、10B | 100 | 1920 | 20 |
| 60、12B | 100 | 1600 | 20 |
| 80、16B | 50 | 600 | 10 |

■ 链条与连接的供给方式——为明确供货链条与连接件的连接方式，现给出几种常规的组合方式，用户也可提出特殊的连接供货方式。

方式一：无连接件，链节数为奇数，链条两端均为内链节。

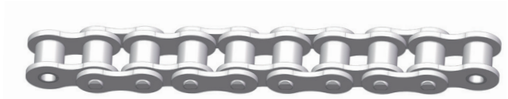

方式二：连接件与链条分开，但一起包装供应。

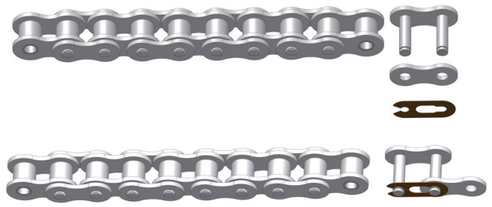

方式三：连接件装配在链条的一端。

方式四：连接件与过渡链接件组合连接在链条的一端。

方式五：用连接件将链条连接成环。

方式六：不用连接件，链条铆接成环。

方式七：链条两端均为连接件。

# 链条使用故障及解决方法 Chain Use Failure and Solution

CHOHO

| 问题或故障 | 产生原因 | 纠正解决方法 |
|---|---|---|
| 零件遗失 | 装配调整 | 更换链条 |
| | 损坏后丢失 | 找出并消除损坏的大原因，更换链条 |
| 链条生锈 | 受潮 | 更换链条，防止链条受潮 |
| | 润滑油中含水 | 更换润滑油，并采取防水措施，更换链条 |
| | 润滑不充分 | 重新设计润滑系统，更换链条 |
| | 处于腐蚀性环境中 | 更换链条，并采取防护链条受腐蚀性侵害的措施 |
| 止锁件丢失或损坏 | 止锁件安装不当 | 止锁件开口背向运动方向 |
| | 碰到障碍 | 排除干扰故障，重新安装止锁件 |
| | 振动过大 | 更换大链轮，减小振动，重新安装止锁件 |
| | 速度过高 | 降低速度或重新设计用小节距链轮，更换链条 |
| 传动噪声大 | 链条碰到障碍 | 排除干扰障碍 |
| | 护罩或轴有松动 | 旋紧或安装好护罩或传动轴。链条已超出磨损范围，更换链条 |
| | 链条过松 | 调整张紧器，达到张紧链条的目的 |
| | 链轮磨损 | 更换链轮或将链轮转向（即受力未工作面）使用 |
| | 链条和链轮不匹配 | 重新计算链条链轮参数，选择更换 |
| | 传动中心距误差大 | 重新计算，确定合理的中心距和张紧力 |
| | 润滑不充分 | 按参数，重新确定润滑系统 |
| | 链条节距过大 | 采用小节距链条的传动 |
| | 链轮齿数过少 | 如有空间，增大链轮齿数 |
| | 链轮不共面 | 按要求重新校正链轮的平行度和轴向位移度 |
| 链条脱不开链轮 | 受力负载波动大 | 合理设计张紧机构 |
| | 链轮磨损严重 | 更换链轮 |
| | 链轮不共面 | 调正链轮并张紧传动链 |
| 链条振动过大 | 设备摇摆与链传动产生共振 | 调整设备或链条传动周期频率 |
| | 链条振动 | 使用大链轮，减小振动 |
| | 传动速度过高 | 降低速度，或用小节距链条 |

| 问题或故障 | 产生原因 | 纠正解决方法 |
|---|---|---|
| 链条爬齿或跳齿 | 链条过松 | 张紧链条 |
| | 链条磨损严重 | 更换链条 |
| | 链轮磨损严重 | 更换链轮 |
| | 过重或超载运行 | 消除过载因素和重新设计选用大档链条和链轮 |
| 链节产生死节 | 链轮不共面，单向挤压 | 校正链轮平行度和轴向位移度 |
| | 润滑不充分链节过烧 | 按工况，重新采取合理的润滑方式 |
| | 零件内产生腐蚀 | 根据使用条件，用抗腐蚀性链条替代 |
| | 过载运行使零件变形 | 消除过载原因，或用加强型链条 |
| | 铰链中有异物 | 清洗链条，加防护罩或过滤冷却润滑油 |
| | 过载或硬度过低，使链板外扩而无侧隙 | 消除过载因素；提高零件硬度，或控制原料脱碳贫碳 |
| 链板有裂纹或断裂 | 处于腐蚀环境产生应力，环境温度过低产生冷脆 | 排除干扰障碍 |
| | 超载严重 | 旋紧或安装好护罩或传动轴。链条已超出磨损范围，更换链条 |
| | 载荷大于链条动态载荷承受能力而疲劳断裂 | 调整张紧器，达到张紧链条的目的 |
| | 跳动共振 | 更换链轮或将链轮转向（即受力未工作面）使用 |
| | 链条传动长期处于震动 | 重新计算链条链轮参数，选择更换 |
| | 传动中瞬间惯性力过大 | 重新计算，确定合理的中心距和张紧力 |
| 链板孔拉大 | 过载 | 按参数，重新确定润滑系统 |
| 销轴在链板中旋转 | 润滑不充分过载 | 采用小节距链条的传动 |
| 销轴断裂 | 过载 | 如有空间，增大链轮齿数 |
| 销轴或套筒胶合 | 速度过快润滑不充分产生 | 按要求重新校正链轮的平行度和轴向位移度 |
| 滚子破裂或变形 | 速度快 | 合理设计张紧机构 |
| | 链轮过小 | 更换链轮 |
| | 链条齿爬 | 调正链轮并张紧传动链 |
| | 传动力过大 | 调整设备或链条传动周期频率 |
| 链板轮廓磨损 | 链条与防护罩、导轮或其它物体摩擦 | 消除碰到链条的障碍；<br>链板磨损达到 5%，链板表面已变色，应更换链条，消除干扰。 |

# 精密短节距滚子（套筒）链轮基本知识 Basic Knowledge of Sprocket

CHOHO

## 链轮分类及标号示意 Sprocket Type And Label Meaning

### ■ 标号示意 Label Meaning

**08 B 3 C 12**

- 08B：链条号（按 GB/ISO 标准） Chain No.(GB/ISO standard)
- 3：链轮排数 Bay Number
- C：链轮结构 Sprocket Structure
- 12：齿数 Number Of Teeth

**08B3C12 表示：链号为 08B 的三排双侧凸缘齿数 12 的链轮**

Example: 08B3C12 mains Sprocket of chain No.08B Triplex Bilateral wheels and teeth No.12

### ■ 链轮结构 Sprocket structure

***A* 型** A type
无凸缘
Without Wheels

***B* 型** B type
单侧凸缘
Unilateral Wheels

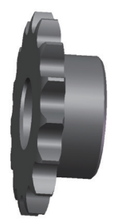

***C* 型** C type
双侧凸缘
Bilateral Wheels

### ■ 链轮排数 Bay Number

单排
Simplex

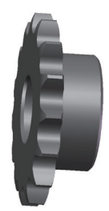

双排
Duplex

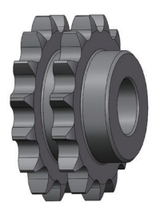

三排
Triplex

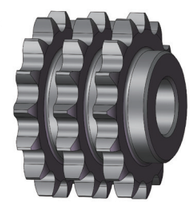

## 链轮的结构 Sprocket Structure

| 结构形式<br>Structure Type | 适用范围<br>Application Range | 一般选用材质<br>Common material |
|---|---|---|
| 整体结构<br>Integral Structure | 标准链条 P=38.1 以下<br>单、双排及单、双凸缘<br>Standard chain below P=38.1,simple ,double and simple ,double flanged sprocket | Q235、Q345(16Mn)、10#、20#、45#、40Cr |
| 焊接结构<br>Welding Structure | 中、大规格单、双凸缘<br>Middle/Large Unilateral/Bilateral Wheels | Q235、Q345(16Mn)、10#、20#、45#、40Cr |
| 铸造链轮<br>Casting Sprocket | 大型链轮的加工<br>Large Sprocket Machine | HTl50、HT200、ZG310−570(ZG45)、QT500−7,ZG40Cr |

## 材料与热处理 Material and Heat-treatment

| 材料<br>Material | 热处理<br>Heat-treatment | 热处理后硬度<br>Hardness | 应用范围<br>Range of Use |
|---|---|---|---|
| 15、20 | 渗碳淬火＋回火<br>Carburizing&Quenching +Tempering | 50~60HRC | Z<25, 有冲击载荷<br>Impact load |
| 35 | 正火<br>Normalizing | 160~200HBS | Z>25，正常工作条件<br>Normal working condition |
| 40、50、ZG310−570 | 淬火＋回火<br>Quenching+Tempering | 40~50HRC | 无剧烈振动及冲击<br>No severe vibration and shock |
| 15Cr、20Cr | 渗碳淬火＋回火<br>Carburizing&Quenching +Tempering | 50~60HRC | Z<25, 有动载荷及传递较大功率<br>Dynamic loads and transmission of higher power |
| 35SiMn、40Cr、35CrMo | 淬火＋回火<br>Quenching+Tempering | 40~50HRC | 使用优质链条的重要场合<br>Important conditions of using high quality chains |
| Q235、Q345 | 焊接后退火<br>Post-weld annealing | 140HBS | 中等速度、传递较大功率<br>Middle speed and transmit large power |
| 灰铸铁（HT150 以上）<br>Gray Iron (above HT150) | 淬火＋回火<br>Quenching+Tempering | 260~280HBS | Z>50 的从动链轮<br>Z>50 driven sprocket |
| 夹布胶木<br>Fabroil | ——— | ——— | 功率小于 6KW，速度较高，要求传动平稳和噪声小<br>Power less than 6KW,high speed,need stable and silence transmit |

## 表面处理与选择 Surface Treatment Method

| 表面处理方式<br>Surface Treatment | 表面膜<br>Surface Film | 作用<br>Function | 防锈<br>Rust Proof Level |
|---|---|---|---|
| 发黑 / 发蓝<br>Black/Blue | $Fe_3O_4$ | 提高防锈能力<br>Improve anti-rust ability | 低<br>Low |
| 磷化<br>Phosphating | 磷酸膜<br>Phosphate film | 提高附着力，减磨润滑<br>Improve adhesion,Friction reduction, unti-rust | 一般<br>Normal |
| 镀锌（镍、铬）<br>Galvanized (nickel, chrome) | 异种金属膜<br>Dissimilar metal film | 增加硬度、抗磨性，增加表面美观<br>Increase hardness, abrasion resistance, increase the surface appearance | 强<br>Stronger |
| 电泳<br>Electrophoresis | 电泳漆膜<br>Electrophoretic Film | 提高耐磨、耐冲击性<br>Improve wearing resistance and impact resistance | 较强<br>Strong |
| 喷（烤）漆<br>Spray (baking) paint | 漆膜<br>Paint film | 提高防锈能力，增加零件美观<br>Improve anti-rust ability, beatify parts | 高<br>High |

## 链轮齿形的几何形状与设计原则

### ■ 链轮齿形的几何形状 Sprocket Teeth Geometrical Shape

常见链轮的几何形状有三圆弧一直线形、两圆弧一直线形、两圆弧凸齿形、一圆弧一直线形、齿槽中心有偏移的直线齿形和直线齿形。

Including triarc with one straightline/biarc with one straightline/biarc with double wedge/single arc with one straightline/ straight tooth profile with offset centre of tooth ace /straight tooth profile.

### ■ 设计原则 Design Discipline

链轮齿形设计主要应满足三方面要求：即啮合要求、使用要求、工艺性与精度要求。

a. 保证链条能顺利的啮入与啮出，不会有干涉现象。
b. 具有足够的容纳链条节距伸长的能力。
c. 具有合理的作用角。
d. 齿廓曲线与链传动工况相适应。

Including:mesh requirment/operating requirment/manufacturability and precision requirment.

- Guarantee chains can engaging in and out without interference.
- The ability of adopting the
- prolongation of chain pitch.
- Motocycle chain transmission system.
- Reasonable action-angle
- Tooth curve match the transmit
- working condition.

## 常用标准与齿形 Common Standard And Tooth Profile

| 常用标准<br>Surface Film | | 齿形<br>Surface Film |
|---|---|---|
| 世界标准<br>World standard | ISO 606 | 三圆弧一直线，两圆弧<br>Triarc with one staightline,biarc |
| 中国标准<br>Chinese standard | GB/T 1243 | 三圆弧一直线，两圆弧<br>triarc with one staightline,biarc |
| 英国标准<br>British standard | BS228 | 三圆弧一直线，两圆弧<br>triarc with one staightline,biarc |
| 欧洲标准<br>Europe standard | DIN 8187 | 三圆弧一直线，两圆弧<br>triarc with one staightline,biarc |
| 日本标准<br>Japanese standard | JIS B 1801 | S 型、U 型<br>S type/U type |

## 齿槽的形状

### ■ 双圆弧

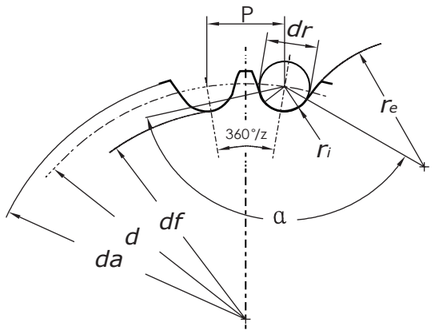


**参数计算公式**

分度圆直径 $d=P/\sin(180°/Z)$

齿顶圆直径 $da_{max}=d+1.25P-dr$

$da_{min}=d+(1-1.6/Z)P-dr$

齿根圆直径 $df=d-dr$

注：链轮的实际齿槽形状，
应在最大齿槽形状和最小齿槽形状的范围内。
链轮参数应注明：节距 P、齿数 Z、滚子直径 dr
工作图中应注明：齿顶圆 da、分度圆直径 d

| 名称 | 单位 | 计算公式 | |
|---|---|---|---|
| | | 最大齿槽宽 | 最小齿槽宽 |
| 齿侧圆弧半径 $r_e$ | mm | $r_{e_{min}}=0.008dr(z^2+180)$ | $r_{e_{max}}=0.12dr(z+2)$ |
| 滚子定位圆弧 $r_i$ | | $r_{i_{max}}=0.505dr+0.069\sqrt[3]{dr}$ | $r_{i_{min}}=0.505dr$ |
| 滚子定位角 α | (°) | $\alpha_{min}=120°-90°/Z$ | $\alpha_{max}=140°-90°/Z$ |

### ■ 三圆弧一直线

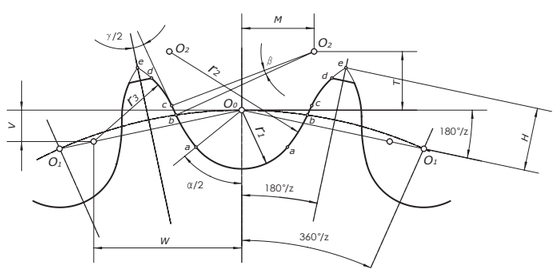


常用的链轮端面齿形见图一。它是在三段圆弧 aa、ab、cd 和一段直线 bc 构成，简称三圆弧一直线齿形。齿形用标准刀具加工，链轮工作图上不必绘制端面齿形，只需在图上注明“齿形按 GB/T1243-2006 规定制造”即可，但应绘制链轮的轴面齿形，尺寸见“轴面齿廓尺寸”。

| 名称 | | 单位 | 计算公式 |
|---|---|---|---|
| 齿沟圆弧半径 $r_i$ | | mm | $r_i= 0.5025dr + 0.05$ |
| 齿沟半角 α/2 | | (°) | $\alpha/2=55°-60°/Z$ |
| 工作段圆弧中心 $O_2$ 的坐标 | M | mm | $M=0.8dr(\sin a/2)$ |
| | T | | $T=0.8dr(\cos a/2)$ |
| 工作段圆弧半径 $r_2$ | | | $r_2=1.3025dr+0.05$ |
| 工作段圆弧中心角 β | | (°) | $\beta=18°-56°/Z$ |
| 齿顶圆弧中心 $O_3$ 的坐标 | W | mm | $W=1.3dr(\cos 180°/Z)$ |
| | V | | $V=1.3dr(\sin 180°/Z)$ |

| 名称 | 单位 | 计算公式 |
|---|---|---|
| 齿形半角 γ/2 | (°) | $\gamma/2=17°-64°/Z$ |
| 齿沟圆弧半径 $r_3$ | mm | $r_3=dr(1.3\cos\gamma/2+0.8\cos\beta-1.3025)-0.05$ |
| 工作段直线部分长度 bc | | $\overline{bc}=dr(1.3\cos\gamma/2+0.8\cos\beta)$ |
| e 点至齿沟圆弧中心连线的距离 H | | $H=\sqrt{r_3^2-(1.3dr-p_0/2)^2}$ $p_0=p(1+\frac{2ri-dr}{d})$ |

注：齿沟圆弧半径 ri，允许比上式计算的大 0.0015dr+0.06mm。

## 轴面齿廓尺寸

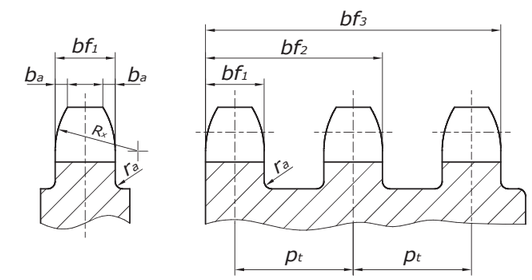


| 名称 | | 计算公式 | | 说明 |
|---|---|---|---|---|
| | | P ≤ 12.7 | P > 12.7 | |
| 齿宽 bf1 | 单排 | 0.93b1 | 0.95b1 | 当 P > 12.7 时，经制造厂同意，也可使用 P ≤ 12.7 的齿宽 |
| | 双排、三排 | 0.91b1 | 0.93b1 | n- 排数 |
| 链轮齿总宽 bfn | | Bfn=(n-1)Pt+bf1 | | |
| 齿侧半径 rx | | rx=P | | |
| 齿侧倒角 ba | | 链号 081、083、084 及 085 时，ba=0.06P；其它链号时 ba=0.13P | | |
| 凸缘（或排间槽）圆角半径 ra | | ra=0.04P | | |

注：齿宽 bf1 的偏差为 h/4。

| 项目 | 尺寸段 | 上偏差 | 下偏差 |
|---|---|---|---|
| 齿根圆直径极限偏差、量柱距极限偏差 | Df ≤ 127 | 0 | -0.25 |
| | 127 < df ≤ 250 | 0 | -0.30 |
| | 250 < df | 0 | h11 |
| 齿宽公差 | h14 | | |
| 轴孔与齿根圆跳动指示值 | 0.0008df+0.08mm 或 0.15mm 最大值，最大为 0.76mm | | |
| 轴孔与齿侧面跳动指示值 | 0.0009df+0.08mm，最大为 1.14mm | | |

## 滚子链传动的设计步骤和传动参数选择

### ■ 传动比 i

链的传动比一般≤ 8，在低速和外廓尺寸不受限制的地方允许到 10。如传动比过大，则链包在小链轮上的包角过小，啮合的齿数太少，这将加速轮齿的磨损，容易出现跳齿，破坏正常啮合。通常包角最好不小于 120，推荐传动比 i =2~3.5。

### ■ 链轮齿数 $Z_1$ 和 $Z_2$

首先应合理选择小链轮齿数 $Z_1$。小链轮齿数不宜过少，过少时，传动不平稳、动载荷及链条磨损加剧，摩擦消耗功率增大，铰链的比压加大及链的工作拉力增大。但是 $Z_1$ 不能太大，因为 $Z_1$ 大，$Z_2$ 更大，不仅增大传动尺寸，而且铰链磨损后容易引起脱链，将缩短链的使用寿命。因为若链条的铰链发生磨损，将使链条节距变长、链轮节圆 d' 向齿顶移动。节距增长量 Δp 与节圆外移量 Δd' 的关系，可由式导出：

$$\triangle d' = \triangle p / \sin(180^\circ / Z_1)$$

由此可知 Δp 一定时，齿数越多节圆外移量 Δd' 就越大，也越容易发生跳齿和脱链现象。

滚子链的小链轮齿数按下表推荐范围选择。

小链轮齿数 z1

| 传动比 | 1~2 | 3~4 | 5~6 | >6 |
|---|---|---|---|---|
| Z1 | 31~27 | 25~23 | 21~17 | 17 |

大链轮齿数 $Z_2$

按 $Z_2=i \cdot Z_1$ 确定，一般应使 $Z_2 \leqslant 120$。

在选取链轮齿数时，应同时考虑到均匀磨损的问题。由于链节数最好选用偶数，所以链轮齿数最好选质数或不能整除链节数的数。

### ■ 链速和链轮的极限转速

链速的提高受到动载荷的限制，所以一般最好不超过 12m/s。链轮最大许用传动功率时的转速为最佳转速。

### ■ 链节距

链节距愈大，链和链轮齿各部尺寸也愈大，链的拉曳能力也愈大，但传动的速度不均匀性、动载荷、噪声等都将增加。因此设计时，在承载能力足够的条件下，应选取较小节距的单排链，高速重载时，可选用小节距的多排链。

### ■ 链的长度和中心距

若链传动中心距过小，则小链轮上的包角也小，同时啮合的链轮齿数也减少；若中心过大，则易使链条抖动。一般可取中心距 a=(30−50)p，最大中心距 $a_{max} \leqslant 80p$。链的长度常用链节数 Lp 表示。按带传动求带长的公式可导出

$$Lp=2\frac{a}{p}+\frac{Z_1+Z_2}{2}+\frac{p}{a}\left(\frac{Z_2-Z_1}{\pi}\right)^2$$

式中 a — 链传动的中心距。

由此算出的链的节数，必须圆整为整数，且最好为偶数。然后根据圆整后的链节数用下式计算实际中心距：

$$a=\frac{p}{4}\left[\left(Lp-\frac{Z_1+Z_2}{2}\right)+\left(Lp-\frac{Z_1+Z_2}{2}\right)^2-8\left(\frac{Z_2-Z_1}{2\pi}\right)^2\right]$$

为了便于安装链条和调节链的张紧程度，一般中心距设计成可以调节的。若中心距不能调节而又没有张紧装置时，应将计算的中心距减小 2−5mm。这样可使链条有小的初垂度，以保持链传动的张紧。

### ■ 链传动的张紧

链传动中如松边垂度过大，将引起啮合不良和链条振动，所以链传动张紧的目的和带传动不同，张紧力并不决定链的工作能力，而只是决定垂度的大小。

张紧的方法很多，最常见的是移动链轮以增大两轮的中心距。但如中心距不可调时，也可以采用张紧轮张紧，张紧轮应装在靠近主动链轮的松边上。不论是带齿的还是不带齿的张紧轮，其分度圆直径最好与小链轮的分度圆直径相近。此外还可以用压板或托板张紧。特别是中心距大的链传动，用托板控制垂度更为合理。

IATF16949质量认证
IATF16949 Quality Certification

ISO9001国际质量认证
ISO9001 Quality Certification

CNAS国家实验室认证
CNAS Laboratory Certification

产品碳足迹认证
Carbon Footprint Certification

征和官方公众号

征和官网

征和官方抖音

CHOHO


**制造厂商：青岛征和工业股份有限公司**
**地　　址：中国青岛平度市香港路112号**
**电　　话：0532-83303898**
**http://www.chohogroup.com**

QINGDAO CHOHO INDUSTRIAL CO.,LTD.
Add: No.112 Hongkong Road, Pingdu, Qingdao City, 266700 China.
Tel / Fax: +86-532-83303898　　E-mail:info@chohogroup.com
http://www.chohogroup.com


Recycled Paper



Your sales representative